Operation and Maintenance Manual
QSC8.3 and QSL9 Engine

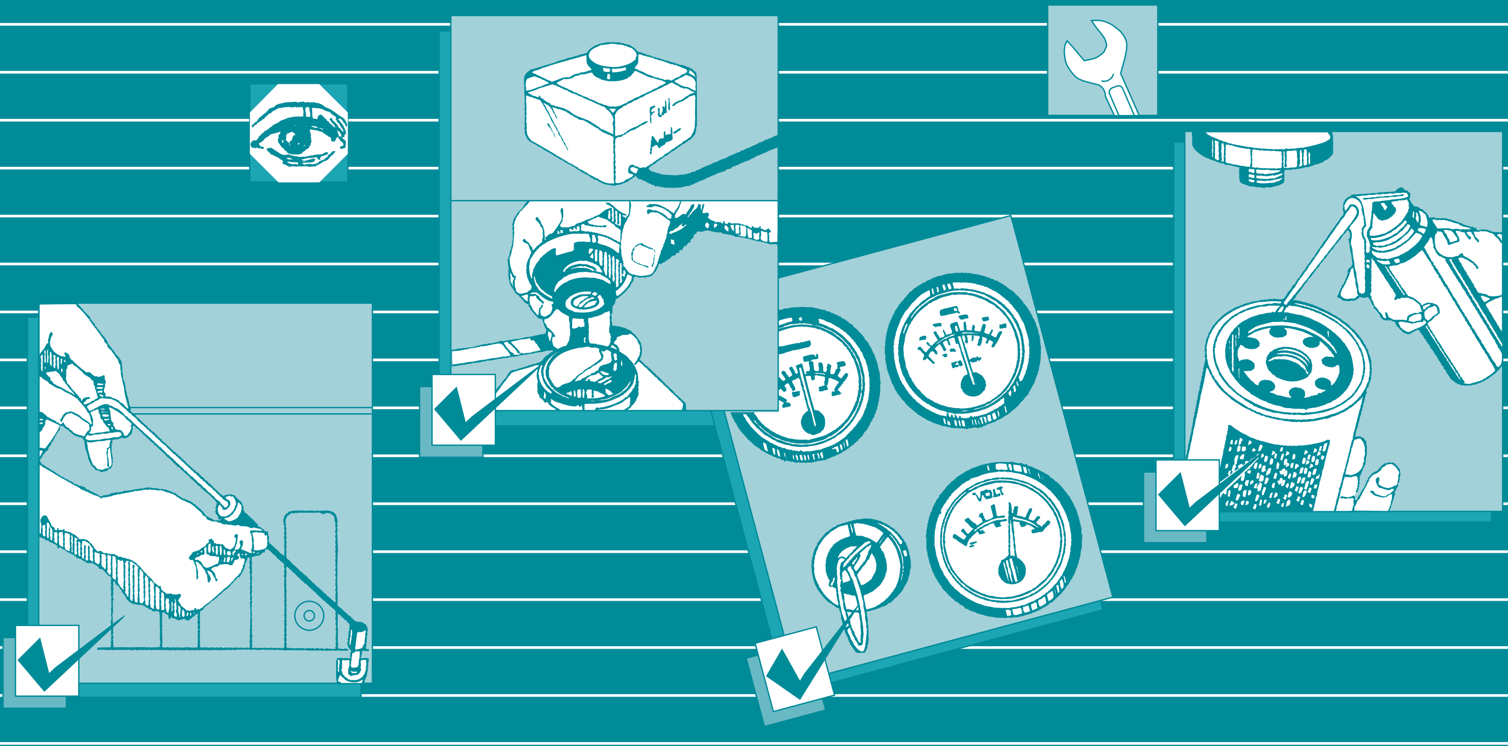

Cummins Customer Assistance Center
1-800-DIESELS™ (1-800-343-7357)
APPLICABLE ONLY IN U.S.A. AND CANADA

Downloaded from www.Manualslib.com manuals search engine

Operation and Maintenance Manual
QSC8.3 and QSL9 Engine

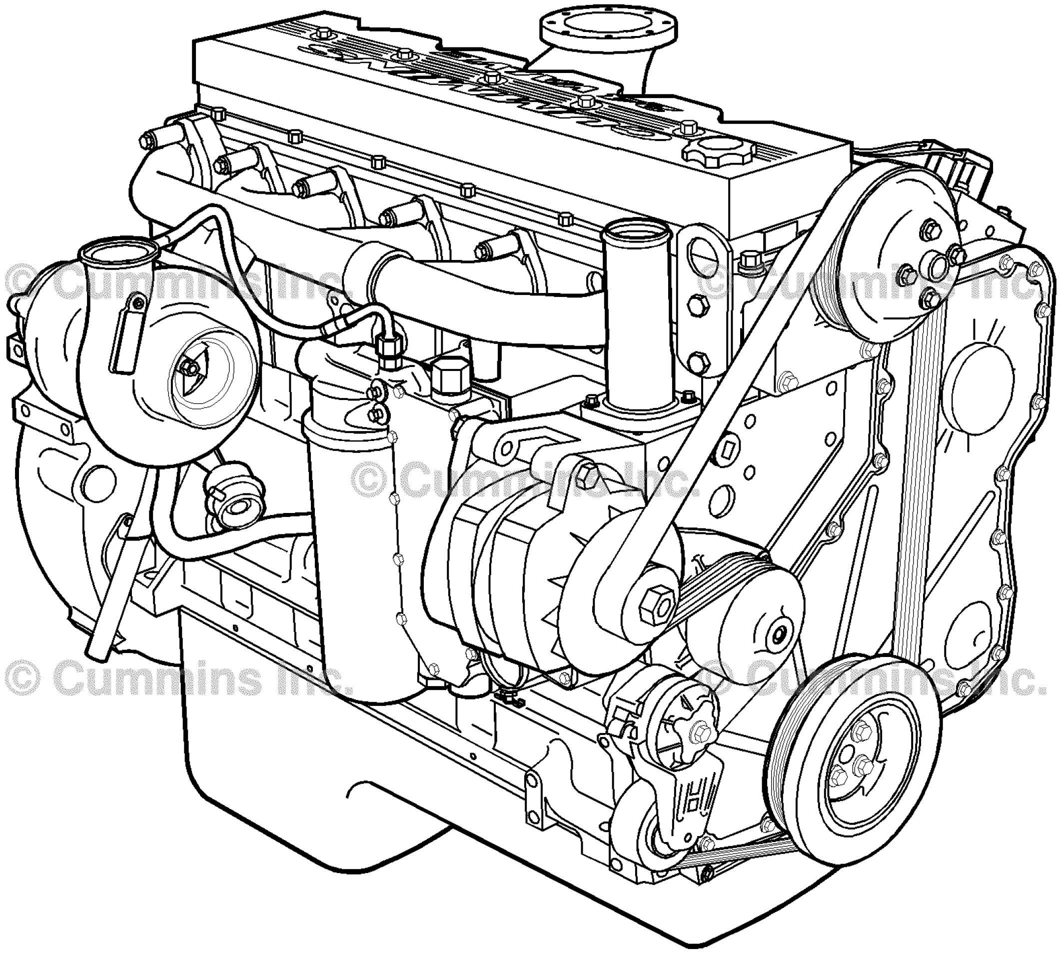

00d00016

Copyright© 2013
Cummins Inc.
All rights reserved

Bulletin 4021518
Printed 09-APRIL-2013

Downloaded from www.Manualslib.com manuals search engine

Foreword

This manual contains information for the correct operation and maintenance of your Cummins engine. It also includes important safety information, engine and systems specifications, troubleshooting guidelines, and listings of Cummins Authorized Repair Locations and component manufacturers.

Read and follow all safety instructions. Refer to the WARNING in the General Safety Instructions in Section i - Introduction.

Keep this manual with the equipment. If the equipment is traded or sold, give the manual to the new owner.

The information, specifications, and recommended maintenance guidelines in this manual are based on information in effect at the time of printing. Cummins Inc. reserves the right to make changes at any time without obligation. If you find differences between your engine and the information in this manual, contact your local Cummins Authorized Repair Location or call 1-800-DIESELS (1-800-343-7357) toll free in the U.S. and Canada.

The latest technology and the highest quality components were used to produce this engine. When replacement parts are needed, we recommend using only genuine Cummins or ReCon® exchange parts.

NOTE: Note: Warranty information is located in Section W. Make sure you are familiar with the warranty or warranties applicable to your engine.

Downloaded from www.Manualslib.com manuals search engine

Table of Contents

	Section
Introduction	i
Engine and System Identification	E
Operating Instructions	1
Maintenance Guidelines	2
Maintenance Procedures at Daily Interval	3
Maintenance Procedures at 250 Hours or 3 Months	4
Maintenance Procedures at 500 Hours or 6 Months	5
Maintenance Procedures at 1000 Hours or 1 Year	6
Maintenance Procedures at 2000 Hours or 2 Years	7
Maintenance Procedures at 5000 Hours or 4 Years	8
Adjustment, Repair, and Replacement	A
System Diagrams	D
Service Literature	L
Service Assistance	S
Engine Storage	ES
Troubleshooting Symptoms	TS
Maintenance Specifications	V
Warranty	W
Back	back

Downloaded from www.Manualslib.com manuals search engine

Important Reference Numbers

Fill in the part name and number in the blank spaces provided below. This will give you a reference whenever service or maintenance is required.

Name	Number	Number
Engine Model		
Engine Serial Number (ESN)		
Control Parts List (CPL)		
Fuel Pump Part Number		
Electronic Control Module (ECM)		
Electronic Control Module Serial Numbers (ECM)		
Filter Part Numbers:		
• Air Cleaner Element		
• Lubricating Oil		
• Fuel		
• Fuel-Water Separator		
• Coolant		
• Crankcase Ventilation		
• Cummins Particulate Filter		
Governor Control Module (GCM) (if applicable)		
Belt Part Numbers:		
•		
•		
•		
Clutch or Marine Gear (if applicable):		
• Model		
• Serial Number		
• Part Number		
• Oil Type		
• Sea Water Pump		
- Model		
- Part Number		

Downloaded from www.Manualslib.com manuals search engine

Section i - Introduction

Section Contents

Page
About the Manual i-2
General Information....................i-2
Acronyms and Abbreviations i-15
General Information....................i-15
General Cleaning Instructions i-10
Abrasive Pads and Abrasive Paper....................i-10
Definition of Clean....................i-10
Fuel System....................i-13
Gasket Surfaces.................... i-11
Plastic Bead Cleaning....................i-12
Solvent and Acid Cleaning....................i-11
Steam Cleaning.................... i-12
General Repair Instructions i-8
General Information....................i-8
Welding on a Vehicle with an Electronic Controlled Fuel System....................i-9
General Safety Instructions i-6
Important Safety Notice....................i-6
How to Use the Manual i-3
General Information....................i-3
Illustrations i-5
General Information....................i-5
Symbols i-4
General Information....................i-4
To the Owner and Operator i-1
General Information....................i-1

Downloaded from www.Manualslib.com manuals search engine

This Page Left Intentionally Blank

Downloaded from www.Manualslib.com manuals search engine

To the Owner and Operator

General Information

Preventive maintenance is the easiest and least expensive type of maintenance. Follow the maintenance schedule recommendations outlined in Maintenance Guidelines (Section 2).

Keep records of regularly scheduled maintenance.

Use the correct fuel, lubricating oil, and coolant in your engine as specified in Maintenance Specifications (Section V). Blending engine oil with fuel is prohibited for engines with an aftertreatment system.

Cummins Inc. uses the latest technology and the highest quality components to produce its engines. Cummins Inc. recommends using genuine Cummins new parts and ReCon® exchange parts.

Personnel at Cummins Authorized Repair Locations have been trained to provide expert service and parts support. If you have a problem that can **not** be resolved by a Cummins Authorized Repair Location, follow the steps outlined in the Service Assistance (Section S).

Product coverage, warranty limitations and owner responsibilities are available in Warranty (Section W).

△CAUTION△

Disconnect both the positive (+) and negative (-) battery cables from the battery before welding on the vehicle. Attach the welder ground cable no more than 0.61 meters [2 feet] from the part being welded. Do not connect the ground cable of the welder to the ECM cooling plate or ECM. Welding on the engine or engine mounted components is not recommended.

Downloaded from www.Manualslib.com manuals search engine

About the Manual

General Information

This manual contains information needed to correctly operate and maintain your engine as recommended by Cummins Inc. For additional service literature and ordering locations, refer to Service Literature (Section L).

This manual does **not** cover vehicle, vessel, or equipment maintenance procedures. Consult the original vehicle, vessel, or equipment manufacturer for specific maintenance recommendations.

Both metric and U.S. customary values are listed in this manual. The metric value is listed first, followed by the U.S. customary in brackets.

Numerous illustrations and symbols are used to aid in understanding the meaning of the text. Refer to Symbols in this section for a complete listing of symbols and their definitions.

Each section of the manual is preceded by a Section Contents to aid in locating information.

Downloaded from www.Manualslib.com manuals search engine

How to Use the Manual

General Information

This manual is organized according to intervals at which maintenance on your engine is to be performed. A maintenance schedule, that states the required intervals and maintenance checks, is located in Maintenance Guidelines (Section 2). Locate the interval at which you are performing maintenance; then follow the steps given in that section for all the procedures to be performed.

Keep a record of all the checks and inspections made. A maintenance record form is located in Maintenance Guidelines (Section 2).

Engine troubleshooting procedures for your engine are located in Troubleshooting Symptoms (Section TS).

Specifications for your engine are located in Maintenance Specifications (Section V).

Downloaded from www.Manualslib.com manuals search engine

Symbols

General Information

The following symbols have been used in this manual to help communicate the intent of the instructions. When one of the symbols appears, it conveys the meaning defined below:

WARNING - Serious personal injury or extensive property damage can result if the warning instructions are **not** followed.

CAUTION - Minor personal injury can result or a part, an assembly, or the engine can be damaged if the caution instructions are **not** followed.

Indicates a **REMOVAL or DISASSEMBLY** step.

Indicates an **INSTALLATION or ASSEMBLY** step.

INSPECTION is required.

CLEAN the part or assembly.

PERFORM a mechanical or time **MEASUREMENT**.

LUBRICATE the part or assembly.

Indicates that a **WRENCH or TOOL SIZE** will be given.

TIGHTEN to a specific torque.

PERFORM an electrical **MEASUREMENT**.

Refer to another location in this manual or another publication for additional information.

The component weighs 23 kg [50 lb] or more. To avoid personal injury, use a hoist or get assistance to lift the component.

17800009

© Cummins Inc.

Downloaded from www.Manualslib.com manuals search engine

Illustrations

General Information

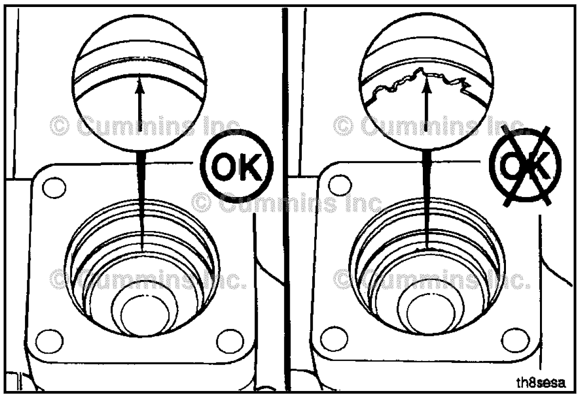

Some of the illustrations throughout this manual are generic and will **not** look exactly like the engine or parts used in your application. The illustrations can contain symbols to indicate an action required and an acceptable or **not** acceptable condition.

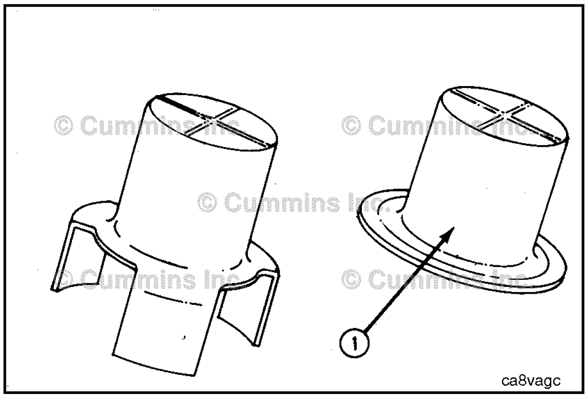

The illustrations are intended to show repair or replacement procedures. The procedure will be the same for all applications, although the illustration can differ.

Downloaded from www.Manualslib.com manuals search engine

General Safety Instructions

Important Safety Notice

WARNING

Improper practices, carelessness, or ignoring the warnings can cause burns, cuts, mutilation, asphyxiation or other personal injury or death.

Read and understand all of the safety precautions and warnings before performing any repair. This list contains the general safety precautions that **must** be followed to provide personal safety. Special safety precautions are included in the procedures when they apply.

- Work in an area surrounding the product that is dry, well lit, ventilated, free from clutter, loose tools, parts, ignition sources and hazardous substances. Be aware of hazardous conditions that can exist.
- **Always** wear protective glasses and protective shoes when working.
- Rotating parts can cause cuts, mutilation or strangulation.
- Do **not** wear loose-fitting or torn clothing. Remove all jewelry when working.
- Disconnect the battery (negative [-] cable first) and discharge any capacitors before beginning any repair work. Disconnect the air starting motor if equipped to prevent accidental engine starting. Put a "Do **Not** Operate" tag in the operator's compartment or on the controls.
- Use ONLY the proper engine barring techniques for manually rotating the engine. Do **not** attempt to rotate the crankshaft by pulling or prying on the fan. This practice can cause serious personal injury, property damage, or damage to the fan blade(s) causing premature fan failure.
- If an engine has been operating and the coolant is hot, allow the engine to cool before slowly loosening the filler cap to relieve the pressure from the cooling system.
- **Always** use blocks or proper stands to support the product before performing any service work. Do **not** work on anything that is supported ONLY by lifting jacks or a hoist.
- Relieve all pressure in the air, oil, fuel, and cooling systems before any lines, fittings, or related items are removed or disconnected. Be alert for possible pressure when disconnecting any device from a system that utilizes pressure. Do **not** check for pressure leaks with your hand. High pressure oil or fuel can cause personal injury.
- To reduce the possibility of suffocation and frostbite, wear protective clothing and ONLY disconnect liquid refrigerant (Freon) lines in a well ventilated area. To protect the environment, liquid refrigerant systems **must** be properly emptied and filled using equipment that prevents the release of refrigerant gas (fluorocarbons) into the atmosphere. Federal law requires capturing and recycling refrigerant.
- To reduce the possibility of personal injury, use a hoist or get assistance when lifting components that weigh 23 kg [50 lb] or more. Make sure all lifting devices such as chains, hooks, or slings are in good condition and are of the correct capacity. Make sure hooks are positioned correctly. **Always** use a spreader bar when necessary. The lifting hooks **must not** be side-loaded.
- Corrosion inhibitor, a component of SCA and lubricating oil, contains alkali. Do **not** get the substance in eyes. Avoid prolonged or repeated contact with skin. Do **not** swallow internally. In case of contact, immediately wash skin with soap and water. In case of contact, immediately flood eyes with large amounts of water for a minimum of 15 minutes. IMMEDIATELY CALL A PHYSICIAN. KEEP OUT OF REACH OF CHILDREN.
- Naptha and Methyl Ethyl Ketone (MEK) are flammable materials and **must** be used with caution. Follow the manufacturer's instructions to provide complete safety when using these materials. KEEP OUT OF REACH OF CHILDREN.
- To reduce the possibility of burns, be alert for hot parts on products that have just been turned off, exhaust gas flow, and hot fluids in lines, tubes, and compartments.
- **Always** use tools that are in good condition. Make sure you understand how to use the tools before performing any service work. Use ONLY genuine Cummins® or Cummins ReCon® replacement parts.
- **Always** use the same fastener part number (or equivalent) when replacing fasteners. Do **not** use a fastener of lesser quality if replacements are necessary.
- When necessary, the removal and replacement of any guards covering rotating components, drives, and/or belts should only be carried out be a trained technician. Before removing any guards the engine **must** be turned off and any starting mechanisms **must** be isolated. All fasteners **must** be replaced on re-fitting the guards.
- Do **not** perform any repair when fatigued or after consuming alcohol or drugs that can impair your functioning.

Downloaded from www.Manualslib.com manuals search engine

- Some state and federal agencies in the United States of America have determined that used engine oil can be carcinogenic and can cause reproductive toxicity. Avoid inhalation of vapors, ingestion, and prolonged contact with used engine oil.
- Do **not** connect the jumper starting or battery charging cables to any ignition or governor control wiring. This can cause electrical damage to the ignition or governor.
- **Always** torque fasteners and fuel connections to the required specifications. Overtightening or undertightening can allow leakage. This is critical to the natural gas and liquefied petroleum gas fuel and air systems.
- **Always** test for fuel leaks as instructed, as odorant can fade.
- Close the manual fuel valves prior to performing maintenance and repairs, and when storing the vehicle inside.
- Coolant is toxic. If **not** reused, dispose of in accordance with local environmental regulations.
- The catalyst reagent contains urea. Do **not** get the substance in your eyes. In case of contact, immediately flood eyes with large amounts of water for a minimum of 15 minutes. Avoid prolonged contact with skin. In case of contact, immediately wash skin with soap and water. Do **not** swallow internally. In the event the catalyst reagent is ingested, contact a physician immediately.
- The catalyst substrate contains Vanadium Pentoxide. Vanadium Pentoxide has been determined by the State of California to cause cancer. Always wear protective gloves and eye protection when handling the catalyst assembly. Do not get the catalyst material in your eyes. In Case of contact, immediately flood eyes with large amounts of water for a minimum of 15 minutes. Avoid prolonged contact with skin. In case of contact, immediately wash skin with soap and water.
- The Catalyst substrate contains Vanadium Pentoxide. Vanadium Pentoxide has been determined by the State of California to cause cancer. In the event the catalyst is being replaced, dispose of in accordance with local regulations.
- California Proposition 65 Warning - Diesel engine exhaust and some of its constituents are known to the State of California to cause cancer, birth defects, and other reproductive harm.

Downloaded from www.Manualslib.com manuals search engine

General Repair Instructions

General Information

This engine or system incorporates the latest technology at the time it was manufactured; yet, it is designed to be repaired using normal repair practices performed to quality standards.

⚠WARNING⚠

Cummins Inc. does not recommend or authorize any modifications or repairs to components except for those detailed in Cummins Service Information. In particular, unauthorized repair to safety-related components can cause personal injury or death. Below is a partial listing of components classified as safety-related:

1 Air Compressor
2 Air Controls
3 Air Shutoff Assemblies
4 Balance Weights
5 Cooling Fan
6 Fan Hub Assembly
7 Fan Mounting Bracket(s)
8 Fan Mounting Capscrews
9 Fan Hub Spindle
10 Flywheel
11 Flywheel Crankshaft Adapter
12 Flywheel Mounting Capscrews
13 Fuel Shutoff Assemblies
14 Fuel Supply Tubes
15 Lifting Brackets
16 Throttle Controls
17 Turbocharger Compressor Casing
18 Turbocharger Oil Drain Line(s)
19 Turbocharger Oil Supply Line(s)
20 Turbocharger Turbine Casing
21 Vibration Damper Mounting Capscrews
22 Manual Service Disconnect
23 High Voltage Interlock Loop
24 High Voltage Connectors/Connections and Harnesses
25 High Voltage Battery System
26 Power Inverter
27 Generator Motor
28 Clutch Pressure Plate

- Follow all safety instructions noted in the procedures
- Follow the manufacturer's recommendations for cleaning solvents and other substances used during repairs. Some solvents have been identified by government agencies as toxic or carcinogenic. Avoid excessive breathing, ingestion and contact with such substances. **Always** use good safety practices with tools and equipment
- Provide a clean environment and follow the cleaning instructions specified in the procedures
- The engine or system and its components **must** be kept clean during any repair. Contamination of the engine, system or components will cause premature wear.
- All components **must** be kept clean during any repair. Contamination of the components will cause premature wear.

Downloaded from www.Manualslib.com manuals search engine

- Perform the inspections specified in the procedures
- Replace all components or assemblies which are damaged or worn beyond the specifications
- Use genuine Cummins new or ReCon® service parts and assemblies

- The assembly instructions have been written to use again as many components and assemblies as possible. When it is necessary to replace a component or assembly, the procedure is based on the use of new Cummins or Cummins ReCon® components. All of the repair services described in this manual are available from all Cummins Distributors and most Dealer locations.

- Follow the specified disassembly and assembly procedures to reduce the possibility of damage to the components

Complete rebuild instructions are available in the service manual which can be ordered or purchased from a Cummins Authorized Repair Location. Refer to Section L — Service Literature for ordering instructions.

Welding on a Vehicle with an Electronic Controlled Fuel System

⚠CAUTION⚠

Disconnect both the positive (+) and negative (-) battery cables from the low voltage battery before welding on the vehicle. Attach the welder ground cable no more than 0.61 meters [2 feet] from the part being welded. Do not connect the ground clamp of the welder to any of the sensors, wiring harness, electronic control units or the components. Direct welding of any electronic components must not be attempted. Sensors, wiring harness, and electronic control unit should be removed if nearby welding will expose these components to temperatures beyond normal operation. Additionally, all electronic control unit connectors must be disconnected

Downloaded from www.Manualslib.com manuals search engine

General Cleaning Instructions

Definition of Clean

Parts **must** be free of debris that can contaminate any engine system. This does **not** necessarily mean they have to appear as new.

Sanding gasket surfaces until the factory machining marks are disturbed adds no value and is often harmful to forming a seal. It is important to maintain surface finish and flatness tolerances to form a quality sealing surface. Gaskets are designed to fill small voids in the specified surface finish.

Sanding gasket surfaces where edge-molded gaskets are used is most often unnecessary. Edge-molded gaskets are those metal carriers with sealing material bonded to the edges of the gasket to seal while the metal portion forms a metal to metal joint for stability. Any of the small amounts of sealing material that can stick to the parts are better removed with a blunt-edged scraper on the spots rather than spending time polishing the whole surface with an air sander or disc.

For those gaskets that do **not** have the edge molding, nearly all have a material that contains release agents to prevent sticking. Certainly this is **not** to say that some gaskets are **not** difficult to remove because the gasket has been in place a long time, has been overheated or the purpose of the release agent has been defeated by the application of some sealant. The object however is just to remove the gasket without damaging the surfaces of the mating parts without contaminating the engine (don't let the little bits fall where they can not be removed).

Bead blasting piston crowns until the dark stain is removed is unnecessary. All that is required is to remove the carbon build-up above the top ring and in the ring grooves. There is more information on bead blasting and piston cleaning later in this document.

Cummins Inc. does **not** recommend sanding or grinding the carbon ring at the top of cylinder liners until clean metal is visible. The liner will be ruined and any signs of a problem at the top ring reversal point (like a dust-out) will be destroyed. It is necessary to remove the carbon ring to provide for easier removal of the piston assembly. A medium bristle, high quality, steel wire wheel that is rated above the rpm of the power tool being used will be just as quick and there will be less damage. Yes, one **must** look carefully for broken wires after the piston is removed but the wires are more visible and can be attracted by a magnet.

Oil on parts that have been removed from the engine will attract dirt in the air. The dirt will adhere to the oil. If possible, leave the old oil on the part until it is ready to be cleaned, inspected and installed, and then clean it off along with any attracted dirt. If the part is cleaned then left exposed it can have to be cleaned again before installation. Make sure parts are lubricated with clean oil before installation. They do **not** need to be oiled all over but do need oil between moving parts (or a good lube system priming process conducted before cranking the engine).

Bead blasting parts to remove exterior paint is also usually unnecessary. The part will most likely be painted again so all that needs happen is remove any loose paint.

Abrasive Pads and Abrasive Paper

The keyword here is "abrasive". There is no part of an engine designed to withstand abrasion. That is they are all supposed to lock together or slide across each other. Abrasives and dirt particles will degrade both functions.

⚠WARNING⚠

Abrasive material must be kept out of or removed from oil passages and parts wear points. Abrasive material in oil passages can cause bearing and bushing failures that can progress to major component damage beyond reuse. This is particularly true of main and rod bearings.

Cummins Inc. does **not** recommend the use of emery cloth or sand paper on any part of an **assembled** engine or component including but **not** limited to removing the carbon ridge from cylinder liners or to clean block decks or counterbores.

Great care **must** be taken when using abrasive products to clean engine parts, particularly on partially assembled engines. Abrasive cleaning products come in many forms and sizes. All of them contain aluminum oxide particles, silicon carbide, or sand or some other similar hard material. These particles are harder than most of the parts in the engine. Since they are harder, if they are pressed against softer material they will either damage the material or become embedded in it. These materials fall off the holding media as the product is used. If the products are used with power equipment the particles are thrown about the engine. If the particles fall between two moving parts, damage to the moving parts is likely.

If particles that are smaller than the clearance between the parts while they are at rest (engine stopped), but larger than the running clearance then damage will occur when the parts move relative to each other (engine started). While the engine is running and there is oil pressure, particles that are smaller than the bearing clearance are likely to pass between the parts without damage and be trapped in the oil filter. However, particles larger than the bearing clearance will remove material from one part and can become embedded in one of the parts. Once embedded in one part it will

Downloaded from www.Manualslib.com manuals search engine

abrade the other part until contact is no longer being made between the two parts. If the damage sufficiently degrades the oil film, the two parts will come into contact resulting in early wear-out or failure from lack of effective lubrication.

Abrasive particles can fly about during cleaning it is **very** important to block these particles from entering the engine as much as possible. This is particularly true of lubricating oil ports and oil drilling holes, especially those located downstream of the lubricating oil filters. Plug the holes instead of trying to blow the abrasive particles and debris with compressed air because the debris is often simply blown further into the oil drilling.

All old gasket material **must** be removed from the parts gasket surfaces. However, it is **not** necessary to clean and polish the gasket surface until the machining marks are erased. Excessive sanding or buffing can damage the gasket surface. Many newer gaskets are of the edge molded type (a steel carrier with a sealing member bonded to the steel). What little sealing material that can adhere is best removed with a blunt-edged scraper or putty knife. Cleaning gasket surfaces where an edge-molded gasket is used with abrasive pads or paper is usually a waste of time.

WARNING

Excessive sanding or grinding the carbon ring from the top of the cylinder liners can damage the liner beyond reuse. The surface finish will be damaged and abrasive particles can be forced into the liner material which can cause early cylinder wear-out or piston ring failures.

Tape off or plug all openings to any component interior before using abrasive pads or wire brushes. If really necessary because of time to use a power tool with abrasive pads, tape the oil drillings closed or use plug and clean as much of the surface as possible with the tool but clean around the oil hole/opening by hand so as to prevent contamination of the drilling. Then remove the tape or plug and clean the remaining area carefully and without the tool. DO NOT use compressed air to blow the debris out of oil drilling on an assembled engine! More likely than **not**, the debris can be blown further into the drilling. Using compressed air is fine if both ends of the drilling are open but that is rarely the case when dealing with an assembled engine.

Gasket Surfaces

The object of cleaning gasket surfaces is to remove any gasket material, not refinish the gasket surface of the part.

Cummins Inc. does **not** recommend any specific brand of liquid gasket remover. If a liquid gasket remover is used, check the directions to make sure the material being cleaned will **not** be harmed.

Air powered gasket scrapers can save time but care must be taken to **not** damage the surface. The angled part of the scraper must be against the gasket surface to prevent the blade from digging into the surface. Using air powered gasket scrapers on parts made of soft materials takes skill and care to prevent damage.

Do **not** scrape or brush across the gasket surface if at all possible.

Solvent and Acid Cleaning

Several solvent and acid-type cleaners can be used to clean the disassembled engine parts (other than pistons. See Below). Experience has shown that the best results can be obtained using a cleaner that can be heated to 90° to 95° Celsius (180° to 200° Fahrenheit). Kerosene emulsion based cleaners have different temperature specifications, see below. A cleaning tank that provides a constant mixing and filtering of the cleaning solution will give the best results. Cummins Inc. does not recommend any specific cleaners. Always follow the cleaner manufacturer's instructions. Remove all the gasket material, o-rings, and the deposits of sludge, carbon, etc., with a wire brush or scraper before putting the parts in a cleaning tank. Be careful not to damage any gasket surfaces. When possible, steam clean the parts before putting them in the cleaning tank.

WARNING

When using solvents, acids, or alkaline materials for cleaning, follow the manufacturers recommendations for use. Wear goggles and protective clothing to reduce the possibility of personal injury.

Experience has shown that kerosene emulsion based cleaners perform the best to clean pistons. These cleaners should **not** be heated to temperature in excess of 77°C (170°F). The solution begins to break down at temperatures in excess of 82°C (180°F) and will be less effective.

Do **not** use solutions composed mainly of chlorinated hydrocarbons with cresols, phenols and/or cresylic components. They often do **not** do a good job of removing deposits from the ring groove and are costly to dispose of properly.

Solutions with a pH above approximately 9.5 will cause aluminum to turn black; therefore do **not** use high alkaline solutions.

Chemicals with a pH above 7.0 are considered alkaline and those below 7.0 are acidic. As you move further away from the neutral 7.0, the chemicals become highly alkaline or highly acidic.

Remove all the gasket material, o-rings, and the deposits of sludge, carbon, etc., with a wire brush or scraper before putting the parts in a cleaning tank. Be careful to **not** damage any gasket surfaces. When possible use hot high

Downloaded from www.Manualslib.com manuals search engine

pressure water or steam clean the parts before putting them in the cleaning tank. Removing the heaviest dirt before placing in the tank will allow the cleaner to work more effectively and the cleaning agent will last longer.

Rinse all the parts in hot water after cleaning. Dry completely with compressed air. Blow the rinse water from all the capscrew holes and the oil drillings.

If the parts are **not** to be used immediately after cleaning, dip them in a suitable rust proofing compound. The rust proofing compound **must** be removed from the parts before assembly or installation on the engine.

Steam Cleaning

Steam cleaning can be used to remove all types of dirt that can contaminate the cleaning tank. It is a good method for cleaning the oil drillings and coolant passages

WARNING

When using a steam cleaner, wear safety glasses or a face shield, as well as protective clothing. Hot steam can cause serious personal injury.

Do **not** steam clean the following components:

- Electrical Components
- Wiring Harnesses
- Injectors
- Fuel Pump
- Belts and Hoses
- Bearings (ball or taper roller)
- Electronic Control Module (ECM)
- ECM Connectors
- Dosing Control Unit
- NOx Sensor.

Plastic Bead Cleaning

Cummins Inc. does **not** recommend the use of glass bead blast or walnut shell media on **any** engine part. Cummins Inc. recommends using **only** plastic bead media, Part Number 3822735 or equivalent on any engine part. **Never** use sand as a blast media to clean engine parts. Glass and walnut shell media when **not** used to the media manufacturer's recommendations can cause excess dust and can embed in engine parts that can result in premature failure of components through abrasive wear.

Plastic bead cleaning can be used on many engine components to remove carbon deposits. The cleaning process is controlled by the use of plastic beads, the operating pressure and cleaning time.

CAUTION

Do not use bead blasting cleaning methods on aluminum pistons skirts or the pin bores in any piston, piston skirt or piston crown. Small particles of the media will embed in the aluminum or other soft metal and result in premature wear of the cylinder liner, piston rings, pins and pin bores. Valves, turbocharger shafts, etc., can also be damaged. Follow the cleaning directions listed in the procedures.

CAUTION

Do not contaminate wash tanks and tank type solvent cleaners with the foreign material and plastic beads. Remove the foreign material and plastic beads with compressed air, hot high pressure water or steam before placing them in tanks or cleaners. The foreign material and plastic beads can contaminate the tank and any other engine parts cleaned in the tank. Contaminated parts may cause failures from abrasive wear.

Plastic bead blasting media, Part Number 3822735, can be used to clean all piston ring grooves. Do **not** sure any bead blasting media on piston pin bores or aluminum skirts.

Follow the equipment manufacturer's cleaning instructions. Make sure to adjust the air pressure in the blasting machine to the bead manufacturer's recommendations. Turning up the pressure can move material on the part and cause the plastic bead media to wear out more quickly. The following guidelines can be used to adapt to manufacturer's instructions:

1 Bead size: U.S. size Number 16 — 20 for piston cleaning with plastic bead media, Part Number 3822735

2 Operating Pressure — 270 kPa (40 psi) for piston cleaning. Pressure should not cause beads to break.

Downloaded from www.Manualslib.com manuals search engine

3 Steam clean or wash the parts with solvent to remove all of the foreign material and plastic beads after cleaning. Rinse with hot water. Dry with compressed air.

CAUTION

The bead blasting operation must not disturb the metal surface. If the metal surface is disturbed the engine can be damaged due to increased parts clearance or inadequate surface finish on parts that move against other parts.

When cleaning pistons, it is **not** necessary to remove all the dark stain from the piston. All that is necessary is to remove the carbon on the rim and in the ring grooves. This is best done by directing the blast across the part as opposed to straight at the part. If the machining marks are disturbed by the blasting process, then the pressure is too high or the blast is being held on one spot too long. The blast operation **must not** disturb the metal surface.

Walnut shell bead blast material is sometimes used to clean ferrous metals (iron and steel). Walnut shell blasting produces a great amount of dust particularly when the pressure if the air pressure on the blasting machine is increased above media manufacturer's recommendation. Cummins Inc. recommends **not** using walnut shell media to clean engine parts due to the risk media embedment and subsequent contamination of the engine.

Cummins Inc. now recommends glass bead media **NOT** used to clean any engine parts. Glass media is too easily embedded into the material particularly in soft materials and when air pressures greater than media manufacturer's recommend are used. The glass is an abrasive so when it is in a moving part, that part is abrading all the parts in contact with it. When higher pressures are used the media is broken and forms a dust of a very small size that floats easily in the air. This dust is very hard to control in the shop, particularly if **only** compressed air (and not hot water) is used to blow the media after it is removed from the blasting cabinet (blowing the part off inside the cabinet may remove large accumulations but never removes all the media).

Bead blasting is best used on stubborn dirt/carbon build-up that has **not** been removed by first steam/higher pressure washing then washing in a heated wash tank. This is particularly true of pistons. Steam and soak the pistons first then use the plastic bead method to safely remove the carbon remaining in the grooves (instead of running the risk of damaging the surface finish of the groove with a wire wheel or end of a broken piston ring. Make sure the parts are dry and oil free before bead blasting to prevent clogging the return on the blasting machine.

Always direct the bead blaster nozzle "across" rather than directly at the part. This allows the bead to get under the unwanted material. Keep the nozzle moving rather than hold on one place. Keeping the nozzle directed at one-place too long causes the metal to heat up and be moved around. Remember that the spray is **not** just hitting the dirt or carbon. If the machining marks on the piston groove or rim have been disturbed then there has **not** been enough movement of the nozzle and/or the air pressure is too high.

Never bead blast valve stems. Tape or use a sleeve to protect the stems during bead blasting. Direct the nozzle across the seat surface and radius rather than straight at them. The object is to remove any carbon build up and continuing to blast to remove the stain is a waste of time.

Fuel System

When servicing any fuel system components, which can be exposed to potential contaminants, prior to disassembly, clean the fittings, mounting hardware, and the area around the component to be removed. If the surrounding areas are **not** cleaned, dirt or contaminants can be introduced into the fuel system.

The internal drillings of some injectors are extremely small and susceptible to plugging from contamination. Some fuel injection systems can operate at very high pressures. High pressure fuel can convert simple particles of dirt and rust into a highly abrasive contaminant that can damage the high pressure pumping components and fuel injectors.

Electrical contact cleaner can be used if steam cleaning tools are **not** available. Use electrical contact cleaner rather than compressed air, to wash dirt and debris away from fuel system fittings. Diesel fuel on exposed fuel system parts attracts airborne contaminants.

Choose lint free towels for fuel system work.

Cap and plug fuel lines, fittings, and ports whenever the fuel system is opened. Rust, dirt, and paint can enter the fuel system whenever a fuel line or other component is loosened or removed from the engine. In many instances, a good practice is to loosen a line or fitting to break the rust and paint loose, and then clean off the loosened material.

When removing fuel lines or fittings from a new or newly-painted engine, make sure to remove loose paint flakes/chips that can be created when a wrench contacts painted line nuts or fittings, or when quick disconnect fittings are removed.

Fuel filters are rated in microns. The word micron is the abbreviation for a micrometer, or one millionth of a meter. The micron rating is the size of the smallest particles that will be captured by the filter media. As a reference, a human hair is 76 microns [0.003 in] in diameter. One micron measures 0.001 mm [0.00004 in.]. The contaminants being filtered out are smaller than can be seen with the human eye, a magnifying glass, or a low powered microscope.

Downloaded from www.Manualslib.com manuals search engine

The tools used for fuel system troubleshooting and repair are to be cleaned regularly to avoid contamination. Like fuel system parts, tools that are coated with oil or fuel attract airborne contaminants. Remember the following points regarding your fuel system tools:

- Fuel system tools are to be kept as clean as possible.
- Clean and dry the tools before returning them to the tool box.
- If possible, store fuel system tools in sealed containers.
- Make sure fuel system tools are clean before use.

Downloaded from www.Manualslib.com manuals search engine

Acronyms and Abbreviations

General Information

The following list contains some of the acronyms and abbreviations used in this manual.

ANSI	American National Standards Institute
API	American Petroleum Institute
ASTM	American Society of Testing and Materials
BTU	British Thermal Unit
BTDC	Before Top Dead Center
°C	Celsius
CO	Carbon Monoxide
CCA	Cold Cranking Amperes
CARB	California Air Resources Board
C.I.B.	Customer Interface Box
C.I.D.	Cubic Inch Displacement
CNG	Compressed Natural Gas
CPL	Control Parts List
cSt	Centistokes
DEF	Diesel Exhaust Fluid
DOC	Diesel Oxidation Catalyst
DPF	Diesel Particulate Filter
ECM	Engine Control Module
EFC	Electronic Fuel Control
EGR	Exhaust Gas Recirculation
EPA	Environmental Protection Agency
°F	Fahrenheit
ft-lb	Foot-Pound Force
FMI	Failure Mode Indentifier
GVW	Gross Vehicle Weight
Hg	Mercury
hp	Horsepower
H_2O	Water
inHg	Inches of Mercury
in H_20	Inches of Water
ICM	Ignition Control Module
IEC	International Electrotechnical Commission
km/l	Kilometers per Liter
kPa	Kilopascal
LNG	Liquid Natural Gas
LPG	Liquified Petroleum Gas
LTA	Low Temperature Aftercooling
MIL	Malfunction Indicator Lamp
MPa	Megapascal
mph	Miles Per Hour
mpq	Miles Per Quart
N•m	Newton-meter
NOx	Mono-Nitrogen Oxides
NG	Natural Gas
O2	Oxygen

Downloaded from www.Manualslib.com manuals search engine

OBD	On-Board Diagnostics
OEM	Original Equipment Manufacturer
OSHA	Occupational Safety and Health Administration
PID	Parameter Identification Descriptions
ppm	Parts Per Million
psi	Pounds Per Square Inch
PTO	Power Takeoff
REPTO	Rear Power Take Off
RGT	Rear Gear Train
rpm	Revolutions Per Minute
SAE	Society of Automotive Engineers
SCA	Supplemental Coolant Additive
SCR	Selective Catalytic Reduction
STC	Step Timing Control
SID	Subsystem Identification Descriptions
VDC	Volts of Direct Current
VS	Variable Speed
VSS	Vehicle Speed Sensor

Downloaded from www.Manualslib.com manuals search engine

Section E - Engine and System Identification

Section Contents

Page
Cummins® Service Engine Model Product Identification E-10
General Information....................E-10
Engine Diagrams E-4
Engine Views....................E-4
Engine Identification E-1
Cummins® Engine Nomenclature....................E-2
ECM Dataplate....................E-3
Engine Dataplate....................E-1
Fuel Injection Pump Dataplate....................E-2

Downloaded from www.Manualslib.com manuals search engine

This Page Left Intentionally Blank

Downloaded from www.Manualslib.com manuals search engine

Engine Identification

Engine Dataplate

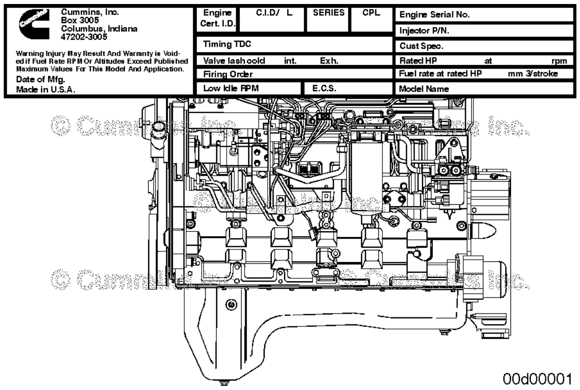

00d00001

The engine dataplate provides important information about the engine. The engine serial number (ESN) and control part list (CPL) provide information for service and for ordering parts. The engine dataplate **must not** be changed unless approved by Cummins Inc.

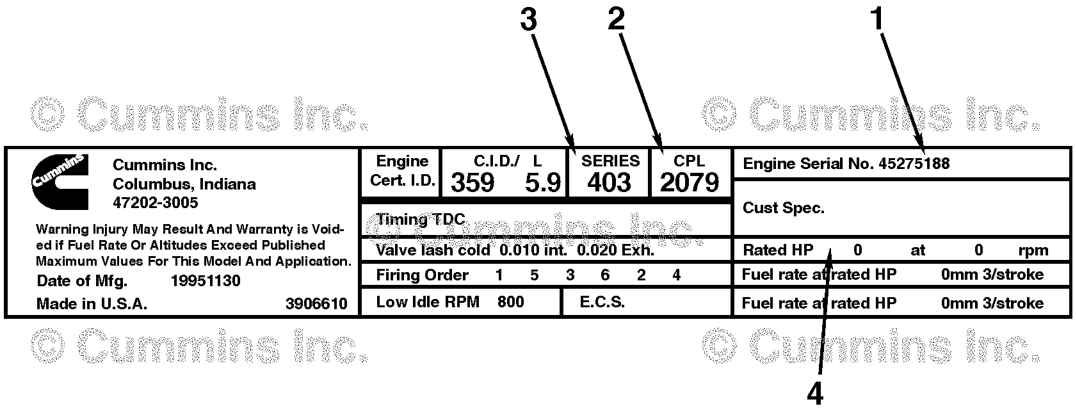

00900061

Have the following engine data available when communicating with a Cummins® Authorized Repair Location:

1 Engine serial number (ESN)
2 Control parts list (CPL)
3 Model
4 Horsepower and rpm rating.

NOTE: Depending on the manufacturing plant, calibration data may also be be found on the engine dataplate.

Downloaded from www.Manualslib.com manuals search engine

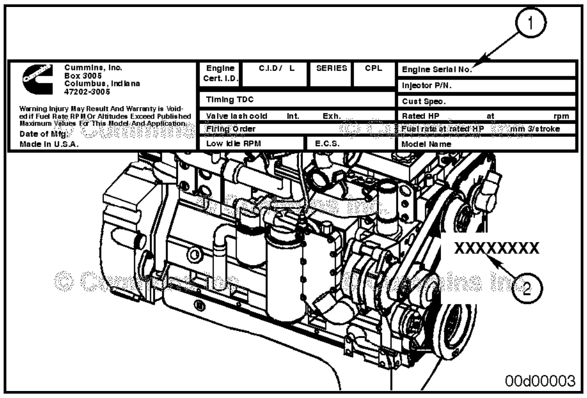

00d00003

If the engine dataplate (1) is **not** legible, the engine serial number (ESN) (2) can be found on the engine block, on top of the lubricating oil cooler housing. Additional engine information is on the ECM dataplate.

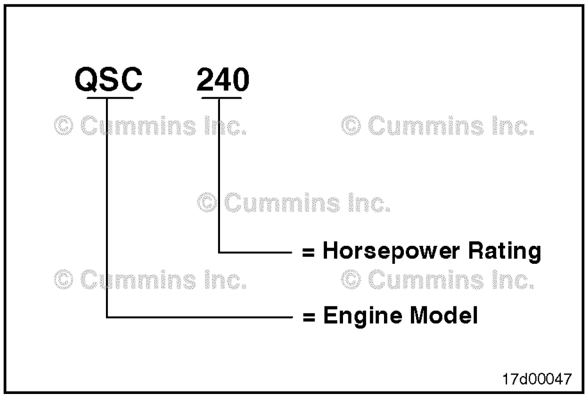

17d00047

Cummins® Engine Nomenclature

The Cummins® engine nomenclature provides the engine model and horsepower rating.

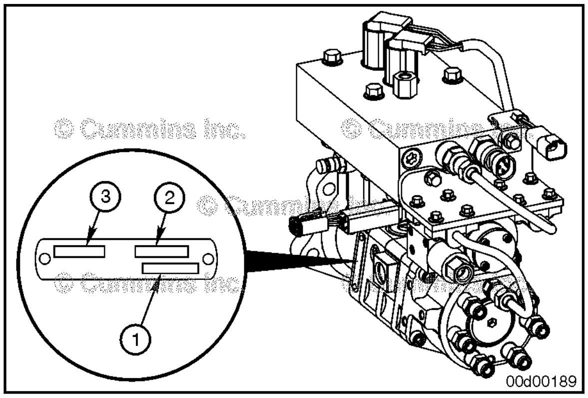

00d00189

Fuel Injection Pump Dataplate

The Cummins® Accumulator Pump System (CAPS) fuel injection pump dataplate is located on the side of the injection pump. The dataplate contains the following information:

1 Cummins® part number
2 Pump serial number
3 Factory code.

Downloaded from www.Manualslib.com manuals search engine

ECM Dataplate

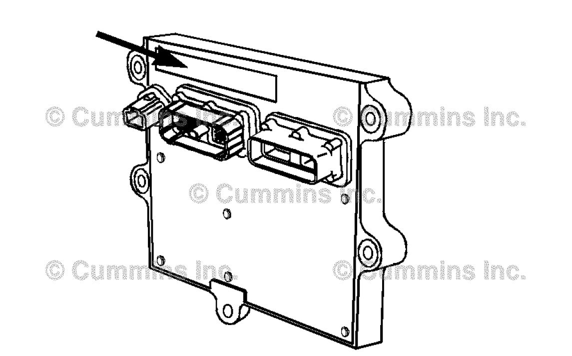
19c01295

The ECM dataplate is located on the front of the ECM.

The following information is found on the ECM dataplate:

- ECM part number (PN)
- ECM serial number (SN)
- ECM date code (DC)
- Engine serial number (ESN)
- ECM Code (identifies the software in the ECM).

NOTE: The presence of an ECM dataplate depends on the manufacturing plant and the date the engine was manufactured. If an ECM dataplate was **not** installed by the manufacturing plant, calibration data can be found on the engine dataplate.

Downloaded from www.Manualslib.com manuals search engine

Engine Diagrams

Engine Views

The following illustrations provide the locations of the major external engine components, filters, and other service and maintenance points. Some external components will be different locations for different engine models.

The illustrations are **only** a reference to show a typical engine.

Downloaded from www.Manualslib.com manuals search engine

Engine Diagrams

Engine Views

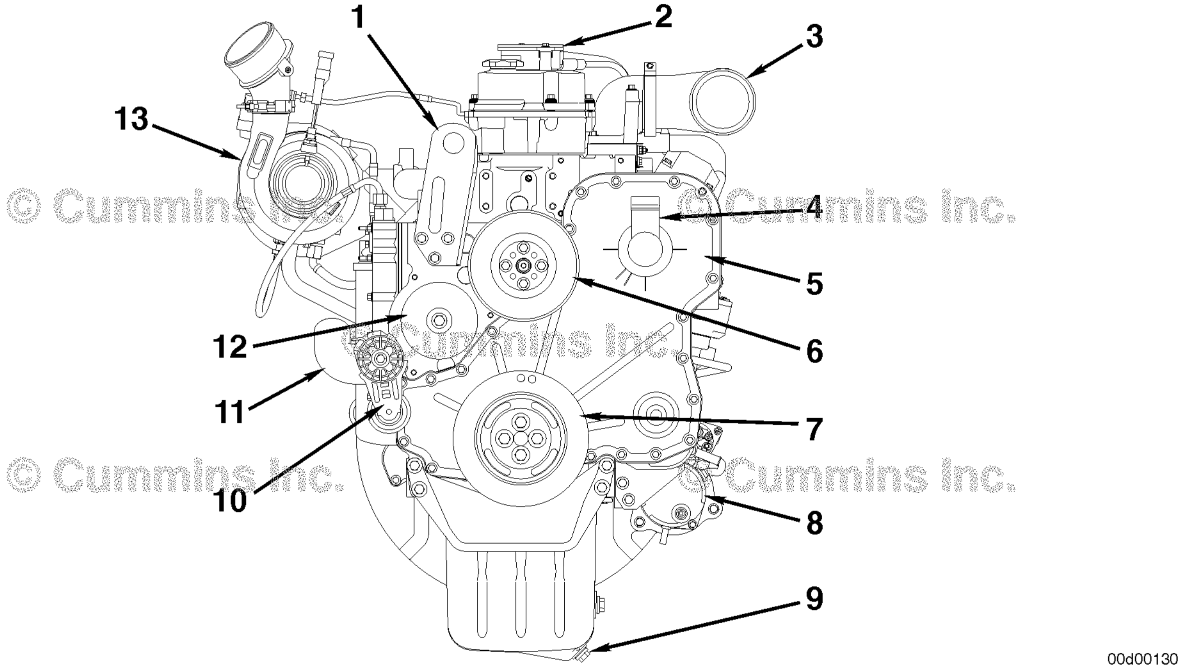

Front Engine View (Cummins® Common Rail Fuel System)

1 Engine lifting bracket
2 Crankcase breather
3 Air intake connection
4 Engine oil fill
5 Front gear cover
6 Fan pulley
7 Vibration Damper
8 Starter
9 Engine oil pan drain plug
10 Automatic belt tensioner
11 Coolant inlet connection
12 Water pump
13 Turbocharger (variable geometry turbocharger shown).

Downloaded from www.Manualslib.com manuals search engine

Engine Diagrams

Engine Views

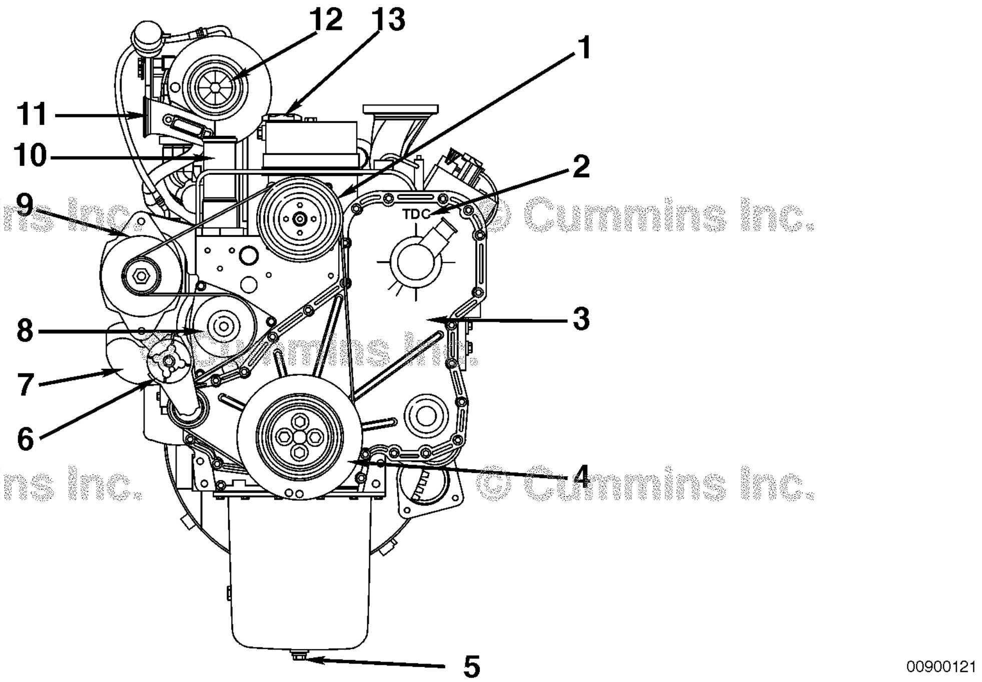

© Cummins Inc.

Front View (CAPS Fuel System)

1 Fan pulley
2 Top dead center (TDC) mark
3 Front gear cover
4 Vibration damper
5 Engine oil pan drain plug
6 Automatic belt tensioner
7 Water inlet
8 Water pump
9 Alternator
10 Water outlet
11 Turbocharger air outlet
12 Turbocharger air inlet
13 Engine oil fill.

Downloaded from www.Manualslib.com manuals search engine

Engine Diagrams

Engine Views

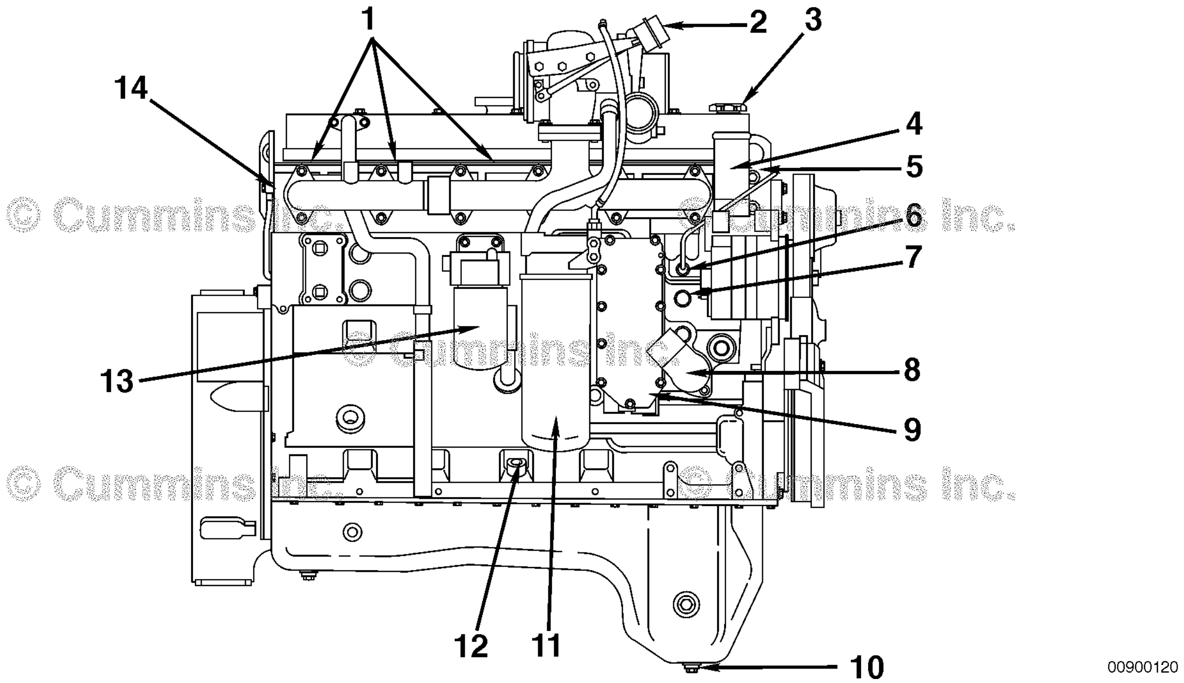

Exhaust Side View (CAPS Fuel System)

1 1/2-inch (NPTF) coolant taps
2 Turbocharger wastegate actuator
3 Engine oil fill
4 Coolant outlet
5 Front engine lifting bracket
6 Coolant temperature sensor
7 Coolant heater port
8 Coolant inlet
9 Lubricating oil cooler
10 Engine oil pan drain plug
11 Lubricating oil filter
12 Dipstick location
13 Coolant filter
14 Injector drain fuel outlet connection.

Downloaded from www.Manualslib.com manuals search engine

Engine Diagrams

Engine Views

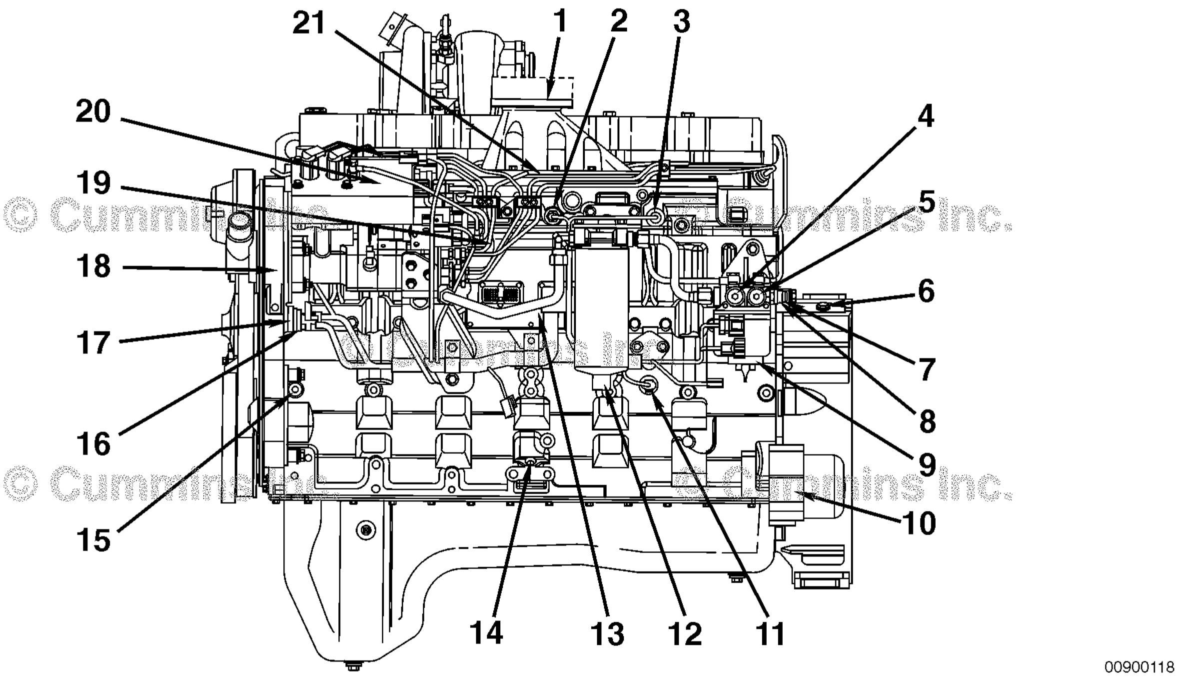

Fuel Pump Side View (CAPS Fuel System)

1 Engine air inlet
2 Intake manifold pressure sensor
3 Intake manifold temperature sensor
4 M10 (STOR) fuel pressure after-lift pump
5 M10 (STOR) fuel pressure before-lift pump
6 Magnetic pickup location 3/4-16 UNF
7 Fuel return connection
8 Fuel inlet connection
9 Fuel lift pump
10 Starter mounting flange
11 Oil pressure sensor
12 Fuel filter/water separator
13 Electronic control module (ECM)
14 Dipstick location
15 M10 (STOR) oil pressure port
16 Engine position sensor (EPS) - (inboard)
17 Engine speed sensor (ESS) - (outboard)
18 Engine dataplate
19 High-pressure fuel lines
20 Cummins® Accumulator Pump System (CAPS) injection pump
21 Intake air heater.

Downloaded from www.Manualslib.com manuals search engine

Engine Diagrams

Engine Views

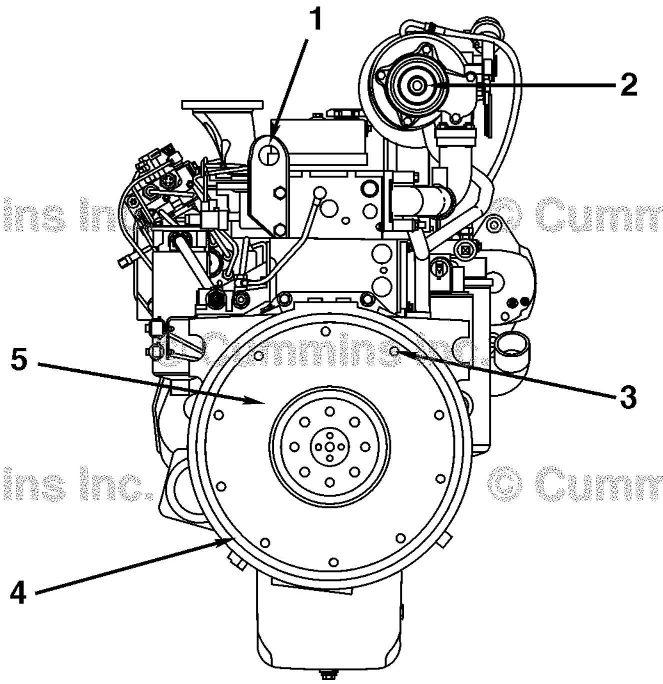

Rear View (CAPS Fuel System)

1 Rear engine lifting bracket
2 Turbocharger exhaust outlet
3 Clutch mounting holes
4 Flywheel housing
5 Flywheel.

Downloaded from www.Manualslib.com manuals search engine

Cummins® Service Engine Model Product Identification

General Information

The Cummins® Service Engine Model Nomenclature procedure describes how engines are identified within Cummins service organization. This method was introduced for models after and including manufacture year 2007.

00c00167

Electronic engines are identified by the first two letters, either an "IS" for On-Highway automotive or "QS" for Off-Highway industrial market applications.

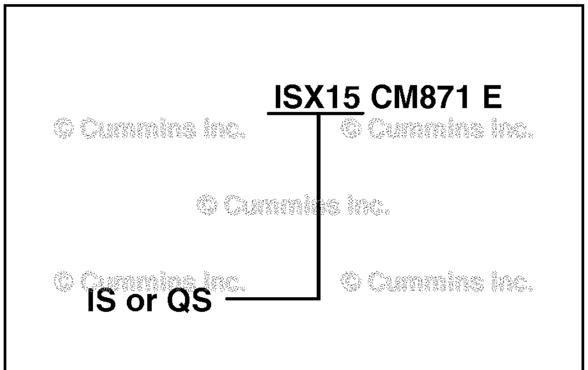

00c00168

The third letter is the engine platform designation followed by the engine liter size.

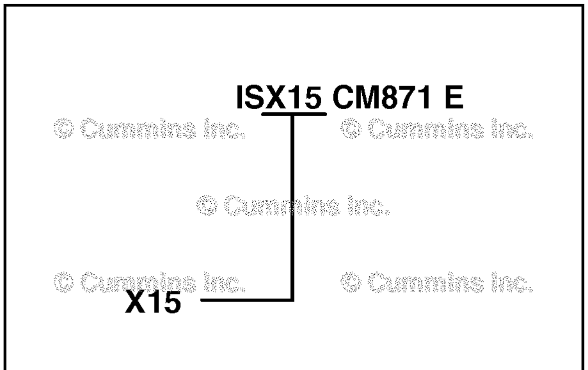

00c00169

If the engine operates on a fuel type other than diesel, the type will be identified after the liter size.

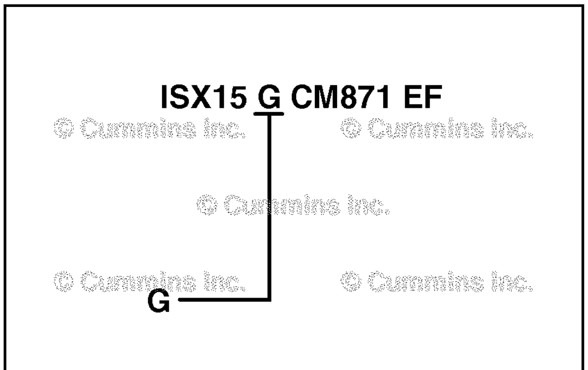

00c00170

Downloaded from www.Manualslib.com manuals search engine

The control system is identified with the letters "CM" followed by the control system model number.

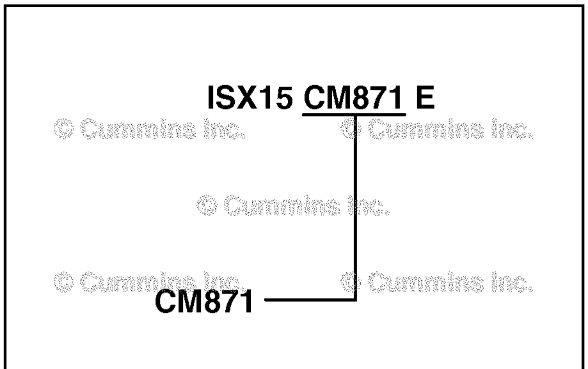

00c00171

The technology identifier after the control system designates the prevailing technology used with the engine. (See table in this procedure for letter designations.)

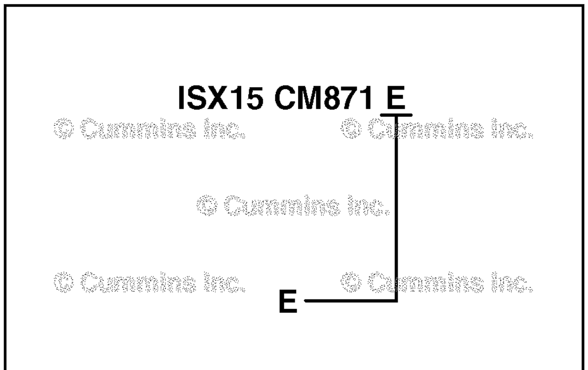

00c00172

Example:

1 On-Highway automotive "X" 15 liter engine
2 Control system number 871
3 Technology supported; Electric EGR and Diesel Particulate Filter

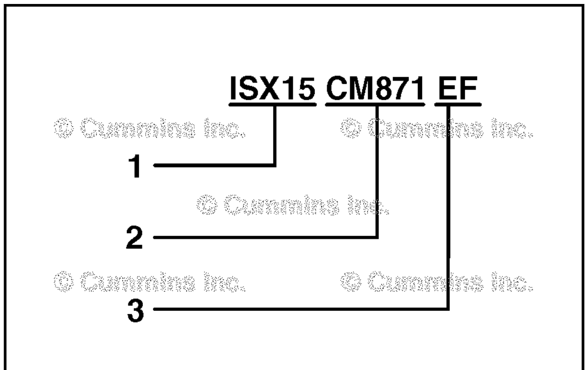

24r00001

Downloaded from www.Manualslib.com manuals search engine

Technology	Name	Suffix
Exhaust Gas Recirculation	Not used	None
	Pneumatic	P
	Electric	E
Diesel Particulate Filter (DPF)	Not used	None
	Full Flow DPF	F
	Partial Flow DPF	F2
Diesel Oxidation Catalyst	Not used	None
	DOC	C
3-Way Oxidation Catalytic Converter	Not used	None
	3-Way Catalyst	J
Selective Catalytic Reduction System	Not used	None
	Air Driven	S
	Airless	A
Nox Sensor	Not used	None
	Nox Sensor	N
Modular Common Rail System	Used only on QSK19, 38, 50 , 60 HHP Engines	MCRS
Integrated Dosing Control Unit	Not Used	None
	Integrated	I

Downloaded from www.Manualslib.com manuals search engine

Section 1 - Operating Instructions

Section Contents

Page
Cold Weather Starting 1-3
General Information 1-3
Using Starting Aids 1-3
Electromagnetic Interference (EMI) 1-53
General Information 1-53
System EMI Radiation Levels 1-53
System EMI Susceptibility 1-53
Electronic Controlled Fuel System 1-7
Diagnostic Fault Codes 1-50
Engine Protection System 1-9
General Information 1-7
Programmable Features 1-10
Engine Operating Range 1-6
General Information 1-6
Engine Shutdown 1-7
General Information 1-7
Normal Starting Procedure 1-2
General Information 1-2
Operating Instructions - Overview 1-1
General Information 1-1
Operating the Engine 1-4
Cold Weather 1-5
Normal 1-4
Winterfronts and Shutters 1-5
Starting Procedure After Extended Shutdown or Oil Change 1-4
General Information 1-4

Downloaded from www.Manualslib.com manuals search engine

This Page Left Intentionally Blank

Downloaded from www.Manualslib.com manuals search engine

Operating Instructions - Overview

General Information

Correct care of your engine will result in longer life, better performance, and more economical operation.

Follow the daily maintenance checks listed in Maintenance Guidelines (Section 2).

The **new** Cummins® engine associated with this manual does **not** require a ”break-in” procedure. This section of the manual provides all of the necessary information required for proper engine operation.

U.S. legislation requires that stationary compression ignition internal combustion engines designated for emergency use are limited to emergency operations and required maintenance and testing.

Check the oil pressure indicators, temperature indicators, warning lights, and other gauges daily to make sure they are operational.

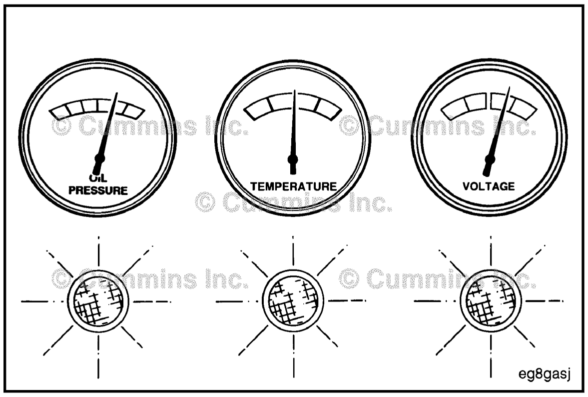

Downloaded from www.Manualslib.com manuals search engine

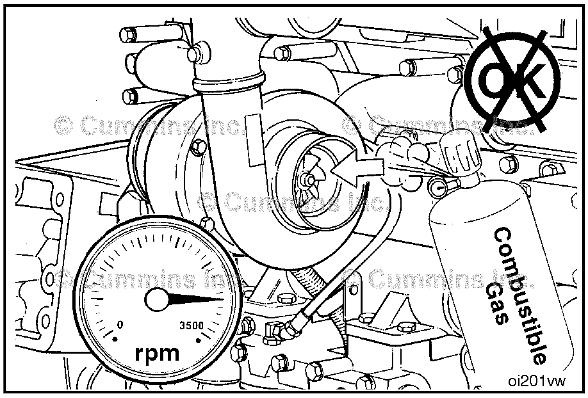

⚠WARNING⚠

DO NOT OPERATE A DIESEL ENGINE WHERE THERE ARE OR CAN BE COMBUSTIBLE VAPORS. The vapors can be sucked through the air intake system and cause engine acceleration and overspeeding that can result in a fire, an explosion, and extensive property damage. Numerous safety devices are available, such as air intake shutoff devices, to minimize the risk of overspeeding where an engine, due to its application, might operate in a combustible environment, such as due to a fuel spill or gas leak. Remember, Cummins has no way of knowing the use you have for your engine. THE EQUIPMENT OWNER AND OPERATOR ARE RESPONSIBLE FOR SAFE OPERATION IN A HOSTILE ENVIRONMENT. CONSULT YOUR CUMMINS AUTHORIZED REPAIR LOCATION FOR FURTHER INFORMATION.

Cummins recommends the installation of an air intake shutoff device or a similar safety device to minimize the risk of overspeeding when an engine is operating in a combustible environment, such as due to a fuel spill or gas leak.

⚠CAUTION⚠

Do not expose the engine to corrosive chemicals. Corrosive chemicals can damage the engine.

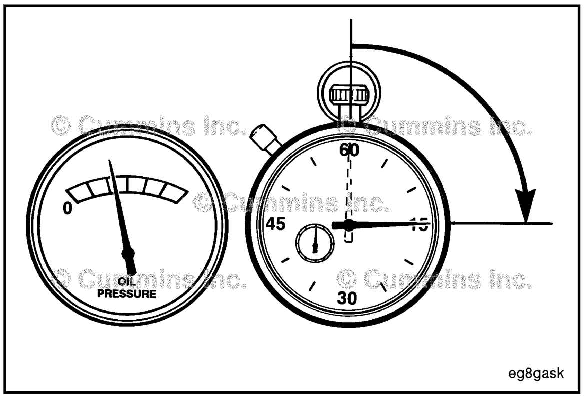

Normal Starting Procedure

General Information

⚠CAUTION⚠

The engine must have adequate oil pressure within 15 seconds after starting. If the WARNING lamp indicating low oil pressure has not gone out or there is no oil pressure indicated on a gauge within 15 seconds, shut off the engine immediately to avoid engine damage. The low oil pressure troubleshooting procedure is located in Troubleshooting Symptoms (Section TS).

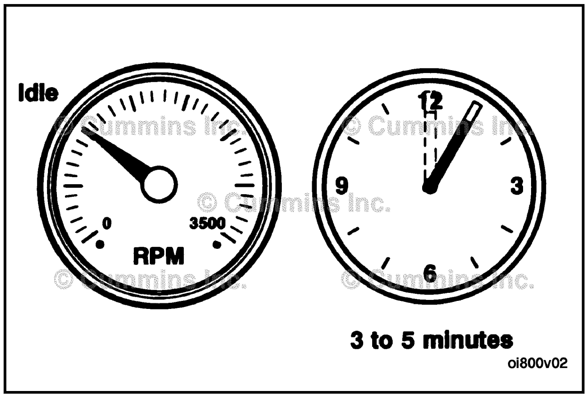

Idle the engine 3 to 5 minutes before operating with a load.

Downloaded from www.Manualslib.com manuals search engine

After starting a cold engine, increase the engine speed (rpm) slowly to provide adequate lubrication to the bearings and to allow the oil pressure to stabilize.

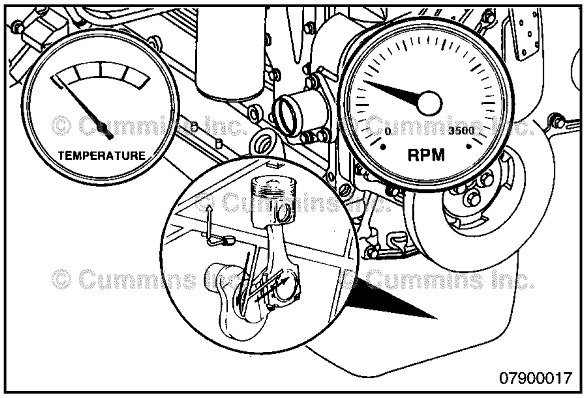

CAUTION

Do not operate engine at low idle for long periods with engine coolant temperature below the minimum specification in Maintenance Specifications (Section V). This can result in the following:

- Fuel Dilution of the lubricating oil
- Carbon build up in the cylinder
- Cylinder head valve sticking
- Reduced performance

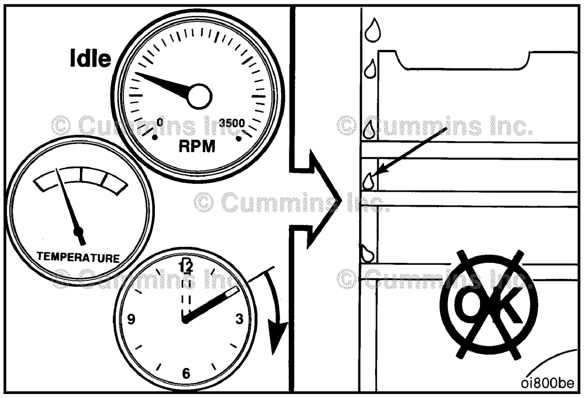

Cold Weather Starting

General Information

CAUTION

To reduce the possibility of damage to the lubricating oil pan, due to the composite materials used in the manufacture of the lubricating oil pan, under no circumstances should an external heat source be applied directly or indirectly to the lubricating oil pan.

Follow the Normal Starting Procedure in this section. If equipped with an intake air heater, the Wait-To-Start lamp will stay on longer.

Refer to the OEM service manual for any additional cold weather starting procedures.

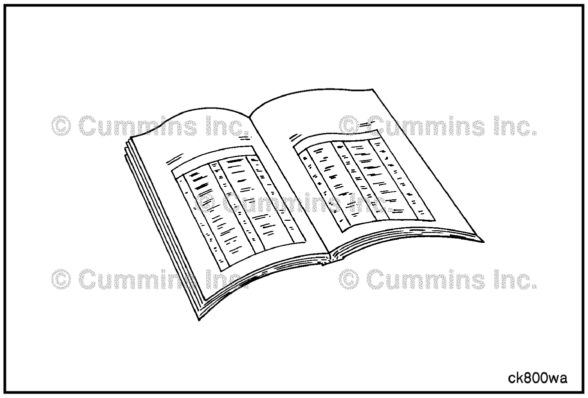

Using Starting Aids

WARNING

Do not use starting fluids with this engine. This engine is equipped with an intake air heater; use of starting fluid can cause an explosion, fire, personal injury, severe damage to the engine, and property damage.

Cold weather starting aids are available for this engine. Contact a Cummins® Authorized Repair Location for more information.

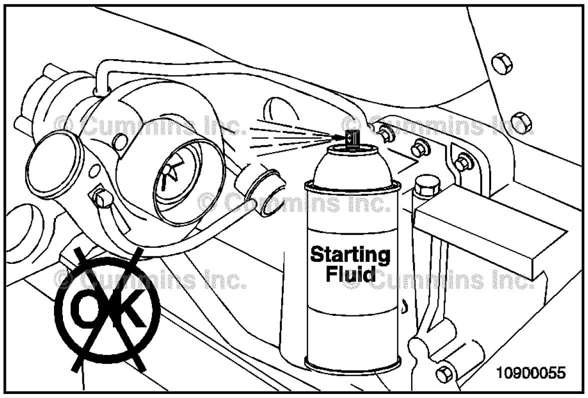

Downloaded from www.Manualslib.com manuals search engine

Starting Procedure After Extended Shutdown or Oil Change

General Information

Follow the Normal Starting Procedure in this section. The engine will **not** start until the minimum cranking oil pressure is detected by the ECM. It can take more cranking time to start the engine after an extended shut down or oil change.

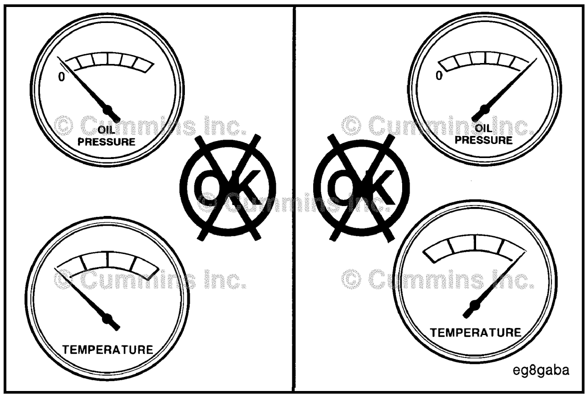

Operating the Engine

Normal

If equipped, monitor the oil pressure and coolant temperature gauges frequently. Refer to Lubricating Oil System specifications and Cooling System specifications, in Maintenance Specifications (Section V) for recommended operating pressures and temperatures. Shut off the engine if any pressure or temperature does **not** meet the specifications.

Continuous operation with engine coolant temperature above or below the engine coolant temperature specifications listed in Maintenance Specifications (Section V) can damage the engine.

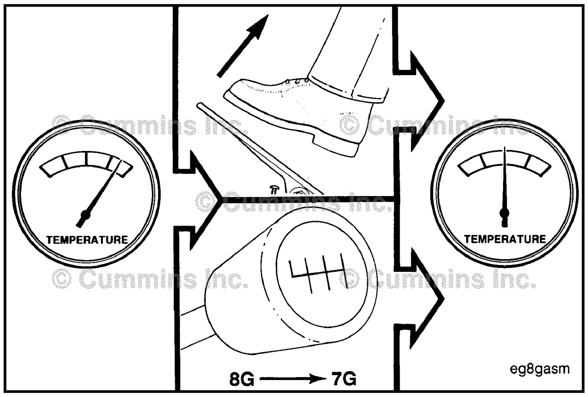

If an overheating condition starts to occur, reduce the power output of the engine by releasing the accelerator pedal or lever or shifting the transmission to a lower gear, or both, until the temperature returns to the normal operating range. If the engine temperature does **not** return to normal, shut off the engine, and refer to Troubleshooting Symptoms (Section TS), or contact a Cummins® Authorized Repair Location.

Downloaded from www.Manualslib.com manuals search engine

Most failures give an early warning. Look and listen for changes in performance, sound, or engine appearance that can indicate service or engine repair is needed. Some changes to look for are:

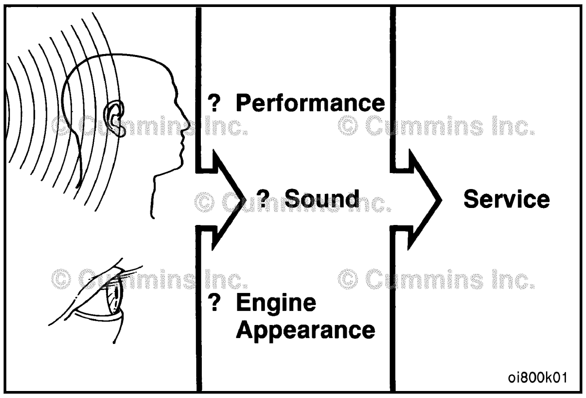

- Engine misfires
- Vibration
- Unusual engine noises
- Sudden changes in engine operating temperatures or pressures
- Excessive smoke
- Loss of power
- An increase in oil consumption
- An increase in fuel consumption
- Fuel, oil, or coolant leaks.

Cold Weather

It is possible to operate engines in extremely cold environments if they are properly prepared and maintained. Satisfactory performance of an engine in low ambient temperature conditions requires modification of the engine, surrounding equipment, operating practices and maintenance procedures.

The correct engine coolant lubricating oil and fuels **must** be used for the cold weather range in which the engine is being operated. Below are the recommendations for these critical engine fluids:

Winterfronts and Shutters

Winterfronts and shutters can be used on a vehicle or equipment to reduce air flow through the radiator core into the engine compartment. This can reduce the time required to warm the engine and help maintain the engine coolant temperature. The engine coolant temperature specifications are in the Maintenance Specification (Section V).

Downloaded from www.Manualslib.com manuals search engine

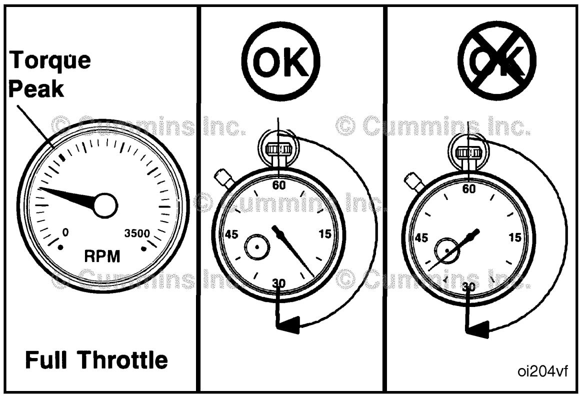

Engine Operating Range

General Information

⚠CAUTION⚠

Do not operate the engine at full throttle below peak torque rpm (refer to engine dataplate for peak torque rpm) for more than 30 seconds. Operating the engine at full throttle below peak torque will shorten engine life to overhaul, can cause serious engine damage, and is considered engine abuse.

Cummins® engines are designed to operate successfully at full throttle under transient conditions down to peak torque engine speed. This is consistent with recommended operating practices.

⚠CAUTION⚠

Do not operate the engine beyond the maximum engine speed. Operating the engine beyond the maximum engine speed can cause severe engine damage. Use proper operating techniques for the vehicle, vessel, or equipment to prevent engine overspeed. The maximum engine speed specification is listed in Maintenance Specifications (Section V).

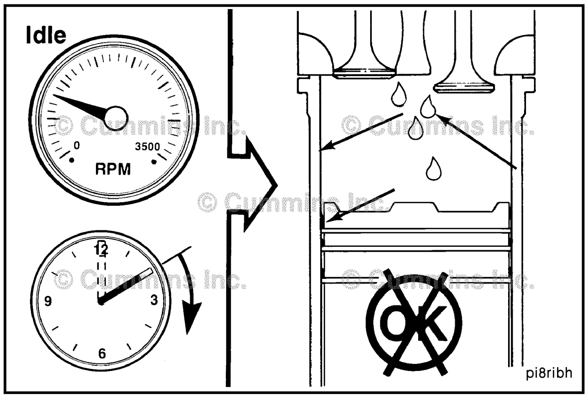

⚠CAUTION⚠

Do not idle the engine for excessively long periods. Long periods of idling, more than 10 minutes, can cause poor engine performance.

Downloaded from www.Manualslib.com manuals search engine

Engine Shutdown

General Information

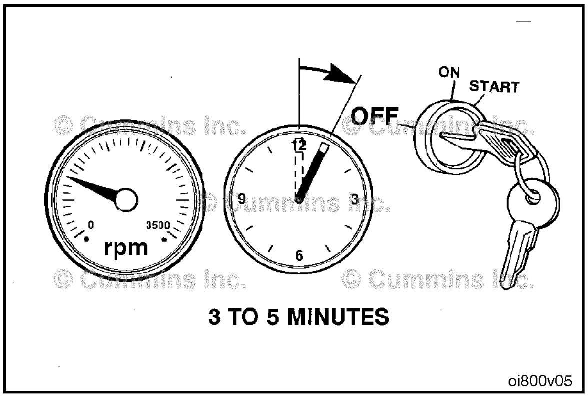

Allow the engine to idle 3 to 5 minutes before shutting it off after a full-load operation. This allows adequate cool down of pistons, cylinders, bearings, and turbocharger components.

NOTE: For engines equipped with an electronic control module (ECM) ensure the keyswitch is turned off for a minimum of 70 seconds prior to disconnecting the continuous (unswitched) battery power supply. If the unswitched battery power supply is disconnected in less than 70 seconds after the keyswitch is turned off active fault codes and incorrect ECM information can occur.

Turn the ignition switch to the OFF position. If the engine does **not** shut down, refer to Troubleshooting Symptom (Section TS) in appropriate Operation and Maintenance manual.

⚠CAUTION⚠
Failure to follow the correct shutdown procedure may result in damage to the turbocharger and shorten the turbocharger life.

Electronic Controlled Fuel System

General Information

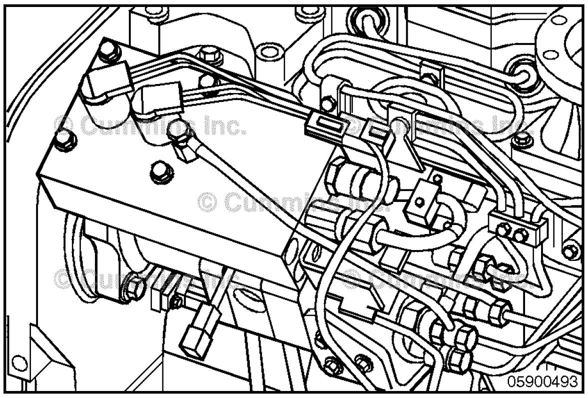

The QSC8.3 engine control system is electronically controlled and also provides many operator and vehicle or equipment features.

The base functions of the control system include fueling and timing control, limiting the engine speed operating range between the low- and high-idle set points, and reducing exhaust emissions while optimizing engine performance.

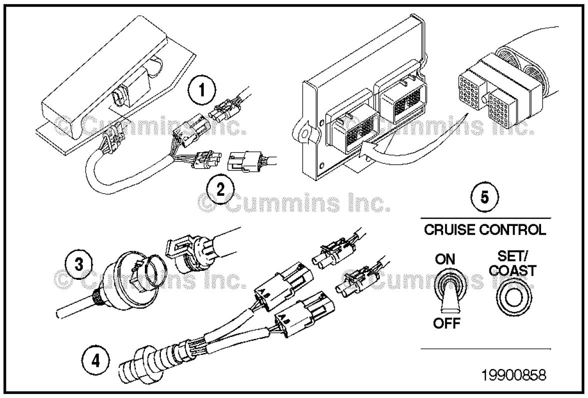

The control system uses inputs from the operator and engine sensors to determine the fueling and timing required to operate at the desired engine speed.

The engine control module (ECM) is the control center of the system. It processes all of the inputs and sends commands to the fuel system, vehicle, and engine control devices.

Downloaded from www.Manualslib.com manuals search engine

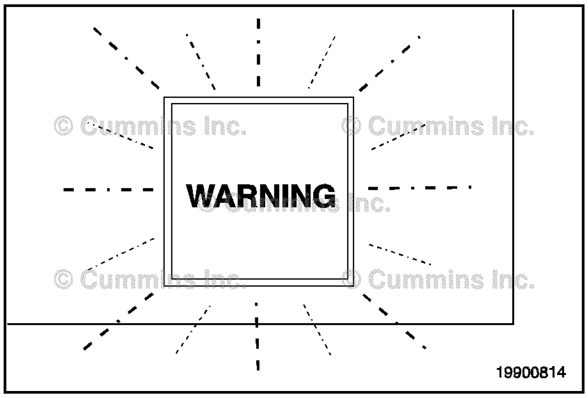

The engine control module (ECM) performs diagnostic tests on most of its circuits and will activate a fault code if a problem is detected in one of these circuits. Along with the fault code identifying the problem, a snapshot of engine operating parameters at the time of fault activation is stored in memory.

Most fault codes will activate a diagnostic lamp to signal the driver.

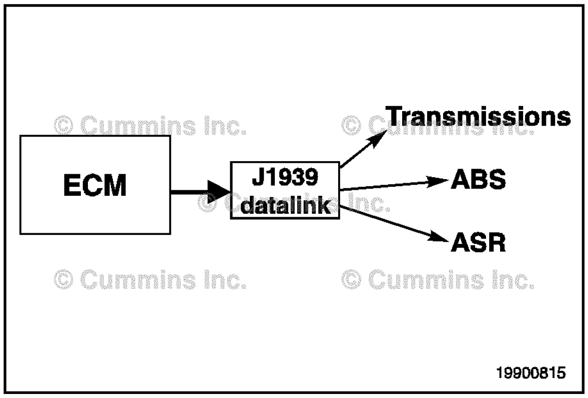

The ECM communicates with service tools and other vehicle controllers such as the transmission, antilock brake system (ABS), and anti-slip reduction through an SAE J1939 datalink.

Some vehicles and equipment will have J1939 networks that link many of the "smart" controllers together. Vehicle control devices can temporarily command engine speed or torque to perform one of its functions such as transmission shifting or antilock braking.

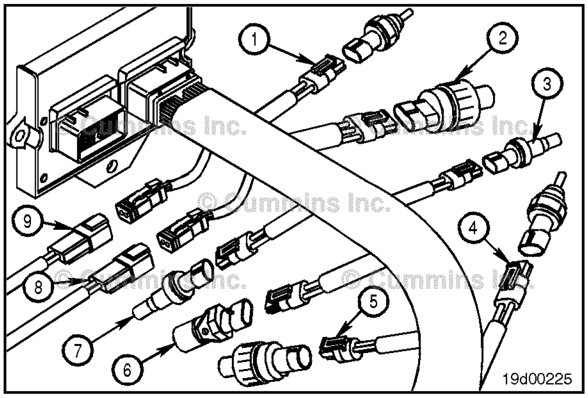

The control system utilizes a number of sensors to provide data on engine operating parameters. These sensors include:

1 Coolant temperature sensor
2 Oil pressure sensor
3 Water-in-fuel sensor
4 Intake air temperature sensor
5 Intake manifold pressure sensor
6 Engine speed and position sensors
7 CAPS fuel temperature sensor
8 Injection control valve
9 Pumping control valves
10 CAPS fuel pressure sensor (**not** shown).

1 Coolant Temperature Sensor
2 Oil Pressure Sensor
3 Water-in-Fuel Sensor
4 Intake Air Temperature Sensor
5 Intake Manifold Pressure Sensor
6 Engine Speed and Position Sensors
7 Cummins® Accumulator Pumping System (CAPS) Accumulator Pressure Sensor
8 Injection Control Valve
9 Pumping Control Valves.

Downloaded from www.Manualslib.com manuals search engine

The following inputs are provided by original equipment manufacturer (OEM)-selected devices:

1 Accelerator pedal position sensor
2 Idle validation switch
3 Coolant level sensor
4 Vehicle speed sensor (VSS)
5 Feature control switches such as cruise control, power take off (PTO), and fan clutch control
6 Accelerator interlock (**not** shown)
7 OEM pressure sensor (**not** shown).

NOTE: These inputs are application-dependent. Some applications will **not** use all of these inputs.

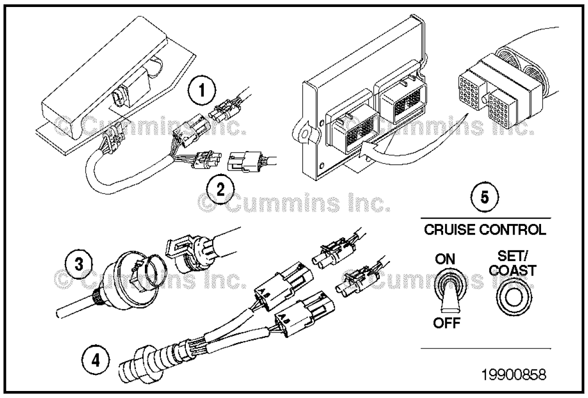

Engine Protection System

CAUTION

When the red STOP lamp is illuminated, the driver must pull to the side of the road, once it is safe to do so, to reduce the possibility of engine damage.

The QSC8.3 engines are equipped with an engine protection system. The system monitors critical engine temperatures and pressures, and will log diagnostic faults when an over or under normal operation condition occurs. If an out-of-range condition exists, and engine derate action is to be initiated, the operator will be alerted by an in-cab WARNING lamp. The WARNING lamp will blink or flash when out-of-range conditions continue to get worse. When the red STOP lamp is illuminated, the driver **must** pull to the side of the road, when it is safe to do so, to reduce the possibility of engine damage.

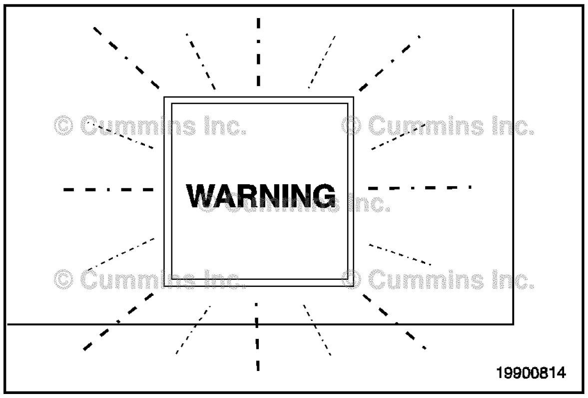

The engine protection system monitors the following data:

- Coolant temperature
- Coolant level (optional)
- Oil pressure
- Intake manifold temperature
- Engine overspeed
- Fuel temperature.
- OEM pressure (optional)

NOTE: Engine power and speed will gradually reduce depending on the severity of the observed condition. The engine protection system will **not** shut down the engine unless the engine protection shutdown feature has been enabled.

Downloaded from www.Manualslib.com manuals search engine

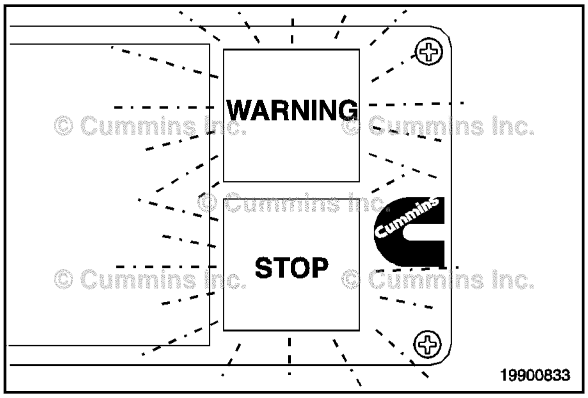

Engine Protection Shutdown

This feature automatically shuts off the engine when the temperature, pressure, or coolant level sensors indicate the engine is operating over or under normal operating conditions.

The red "STOP" lamp in the cab will flash for 30 seconds prior to shutdown to alert the driver.

The engine protection shutdown feature can be enabled or disabled using the INSITE™ electronic service tool if the feature is available in the calibration.

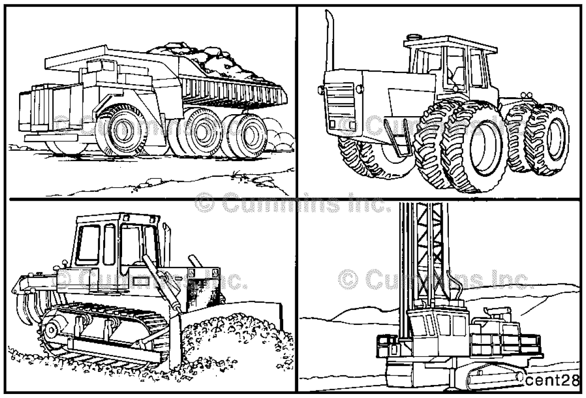

Programmable Features

Control System Features

The electronic control system can provide many features that are integrated into the vehicle operation. Some of these features can be adjusted or turned on or off with a service tool, but some are set at the factory and can **not** be changed.

The following section describes the functionality of each feature. Whether a feature is available in a given application is calibration dependent.

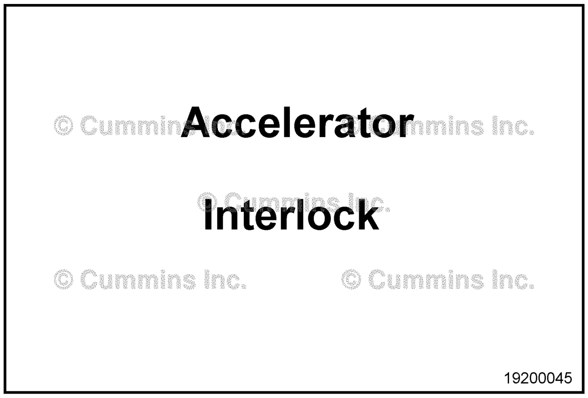

Accelerator Interlock

When the accelerator interlock feature is active and the external accelerator inhibit switch is active, the accelerator action will be disregarded with respect to fueling and the engine shall run at low idle speed or at the remote PTO speed if the remote PTO switch is activated. Because of different customer needs, each particular manufacturer will build the interaction with its brakes, transmission, and fast/slow idle selection capabilities.

Example: Most buses use this feature to disable the accelerator pedal and PTO operation while the bus door is open.

NOTE: This is **not** a customer adjustable feature.

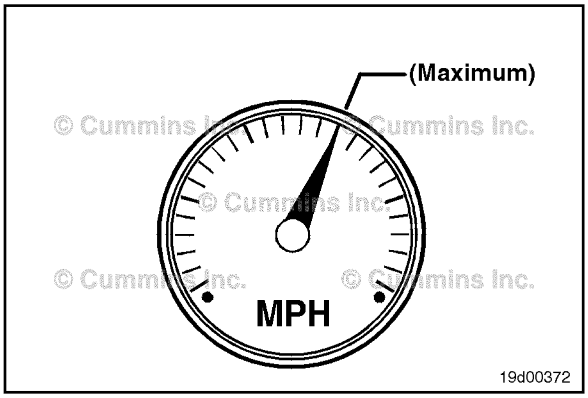

Road Speed Governor

The road speed governor limits the maximum road speed of the vehicle in top gear.

The maximum vehicle speed in top gear is the maximum road speed for the vehicle. This speed **must** be greater than or equal to the maximum cruise speed if the cruise control feature is enabled.

Downloaded from www.Manualslib.com manuals search engine

Smart Road Speed Governor

The smart road speed governor feature, when enabled, allows the operator to adjust the maximum vehicle speed limit by using an OEM switch, typically the cruise ACCEL/ RESUME switch.

This feature can be used for city driving when reducing maximum vehicle speed can help prevent receiving speeding tickets.

To adjust the maximum vehicle speed limit, the cruise control ON/OFF switch **must** be off and the COAST/ ACCEL switch can be used to raise or lower the current limit.

NOTE: The maximum speed limit can **not** be adjusted above the predefined maximum vehicle speed in top gear limit.

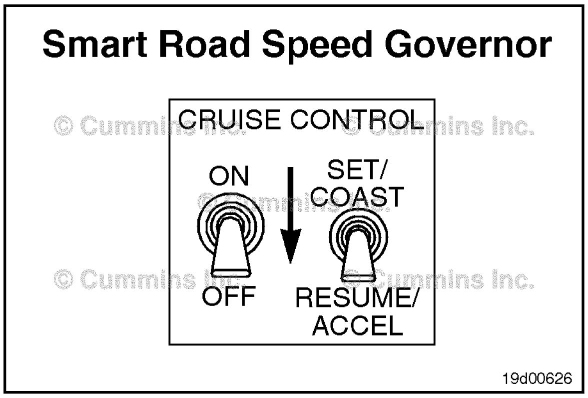

Road Speed Governor Upper Droop

The road speed governor upper droop parameter allows tailoring of the torque curve before the maximum vehicle speed is reached while operating the road speed governor. Increasing the droop can increase fuel economy in hilly terrain. The setting can be between zero and three mph.

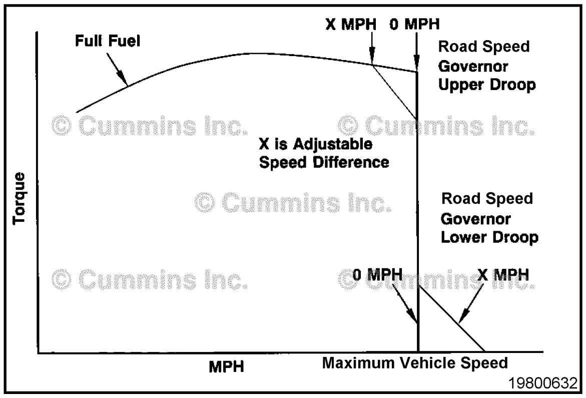

Road Speed Governor Lower Droop

The road speed governor upper droop parameter allows tailoring of the torque curve in a downhill or no-load condition while operating the road speed governor before fueling is completely cut off. Faster downhill speed increases momentum going up the next hill and improves fuel economy in rolling terrain. The setting can be between zero and three mph.

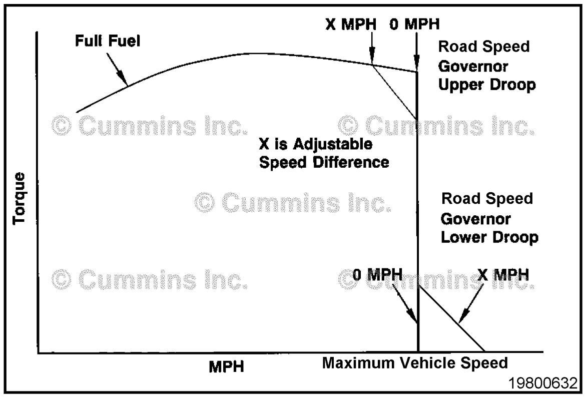

Cruise Control

The cruise control feature gives the driver the capability of a "foot off" accelerator cruise operation. It is similar to an automobile cruise control.

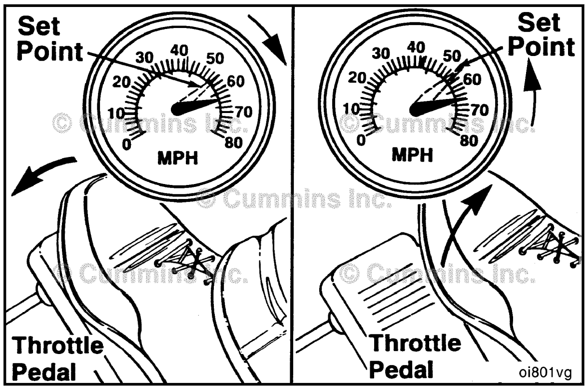

Downloaded from www.Manualslib.com manuals search engine

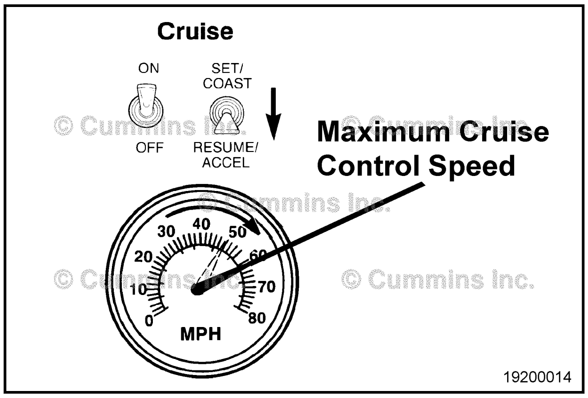

Maximum Cruise Control Speed

This speed is the maximum allowable cruise set speed.

NOTE: The maximum cruise control speed can **not** exceed the maximum vehicle speed in the top gear setting.

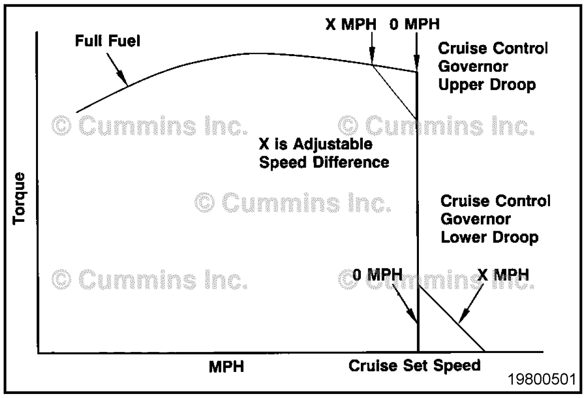

Cruise Control Governor Upper Droop

The cruise control governor upper droop parameter allows tailoring of the torque curve before the maximum vehicle speed is reached while operating in cruise control. Increasing the droop can increase fuel economy in hilly terrain. The setting can be between zero and three mph.

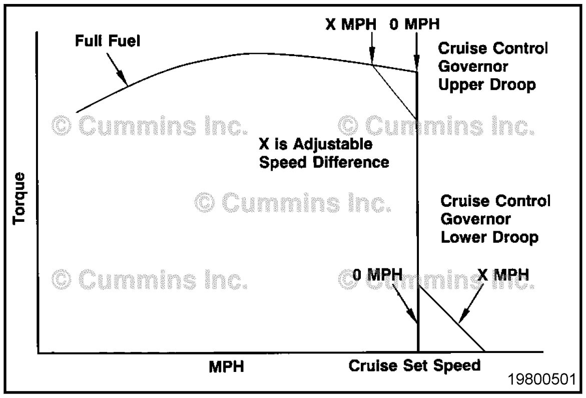

Cruise Control Governor Lower Droop

The cruise control governor lower droop allows tailoring of the torque curve in a downhill or no-load condition while operating in cruise control before fueling is completely cut off. Faster downhill speed increases momentum going up the next hill and can improve fuel economy in rolling terrain. The setting can be between zero and three mph.

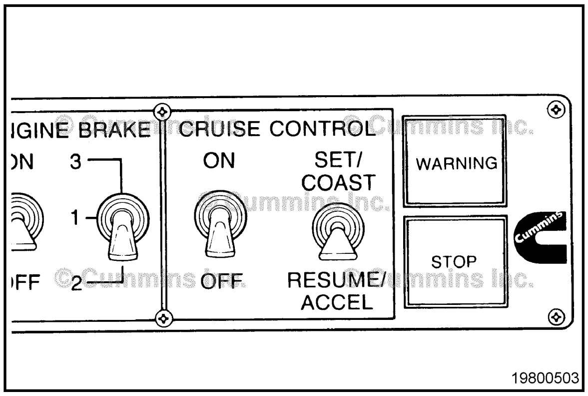

SET/ACCEL

The SET/ACCEL parameter tells the ECM how the cab switch is configured. If it is set to YES, the cab switch will be SET/ACCEL in one position and RESUME/COAST in the other position. If it is set to NO, SET/COAST will be in one position while RESUME/ACCEL will be in the other position.

Downloaded from www.Manualslib.com manuals search engine

Cruise Control Set Speed Save

This feature permits the adjustable cruise control speed to be saved through an engine shutdown and restart. This feature may be programmed using the INSITE™ service tool. When this feature is enabled, the adjustable cruise control speed established prior to shutdown may be resumed after next restart using the RESUME function of the cruise SET/RESUME switch.

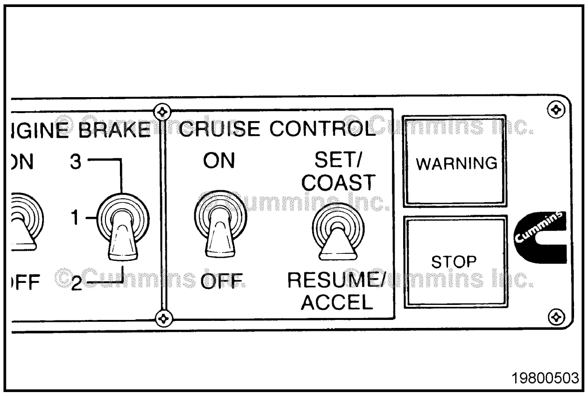

Power Takeoff (PTO)

The PTO feature controls the engine at a constant rpm selected by the operator. For applications needing the PTO mode, a remote mounted switch can be used when a cab switch is **not** desirable. The cruise control switches are used for the PTO feature also.

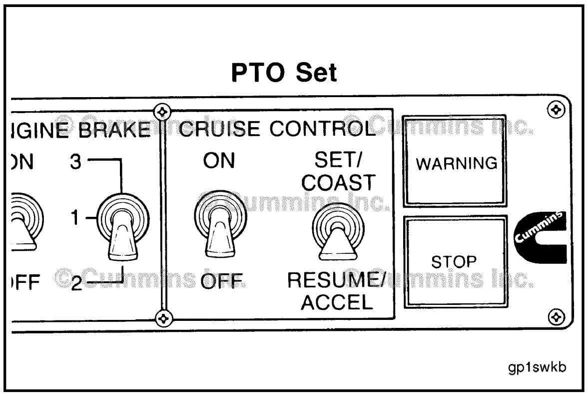

PTO Maximum Speed

The PTO maximum speed parameter is the maximum engine speed that can be obtained while in the PTO mode.

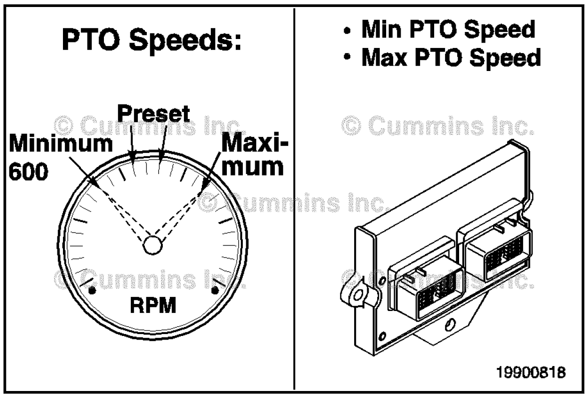

PTO Minimum Speed

The PTO minimum speed parameter is the minimum engine speed that can be obtained while in the PTO mode.

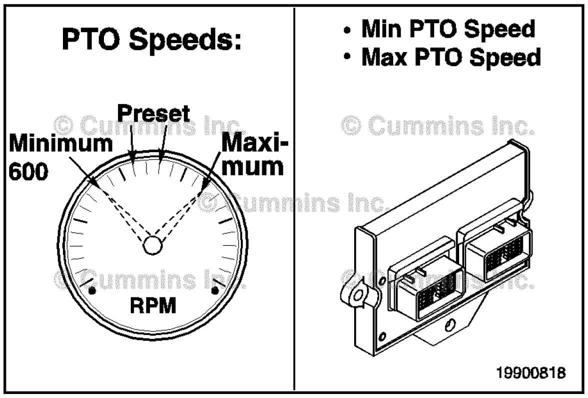

Downloaded from www.Manualslib.com manuals search engine

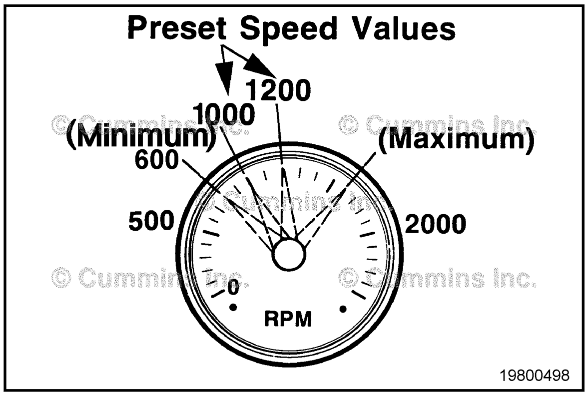

19800498

PTO Set Point

The set point is for the PTO engine speed. This speed is obtained when the PTO ON/OFF switch is in the ON position and the SET switch is used.

NOTE: PTO set speed can **not** exceed the maximum PTO speed.

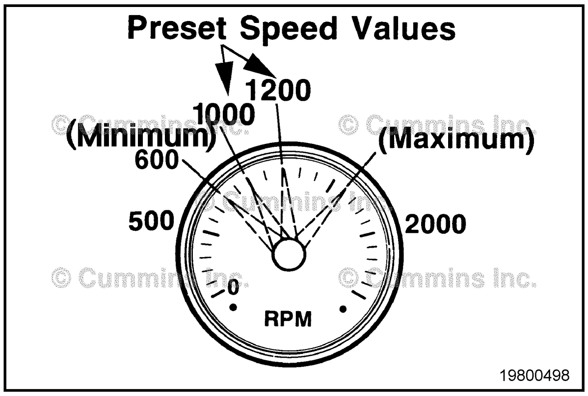

19800498

PTO Resume Speed

This is the engine speed that will be obtained when the RESUME switch is used.

NOTE: PTO resume speed can **not** exceed the maximum PTO speed.

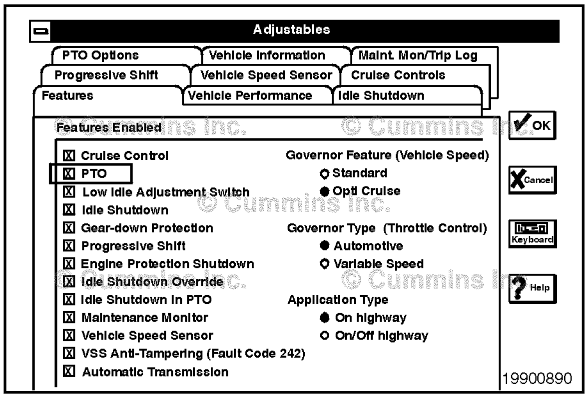

19900890

Maximum Engine Load in PTO

Some devices that are driven by the engine during PTO operation are sensitive to input torque. The maximum engine torque that can be output by the engine during PTO operation can be adjusted to protect these devices.

NOTE: This torque limit is also in effect during accelerator override of the PTO function.

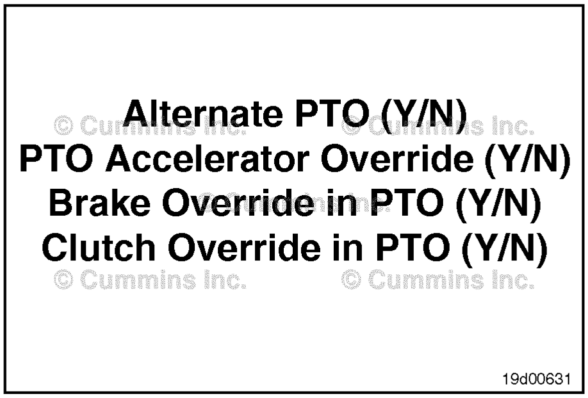

19d00631

Alternate PTO

The alternate PTO feature allows new SET/RESUME PTO speeds to be established **only** when PTO is inactive. This is designed to protect pumping applications when high engine speed changes while in PTO mode could cause pump damage.

The INSITE™ electronic service tool can enable or disable this feature.

Downloaded from www.Manualslib.com manuals search engine

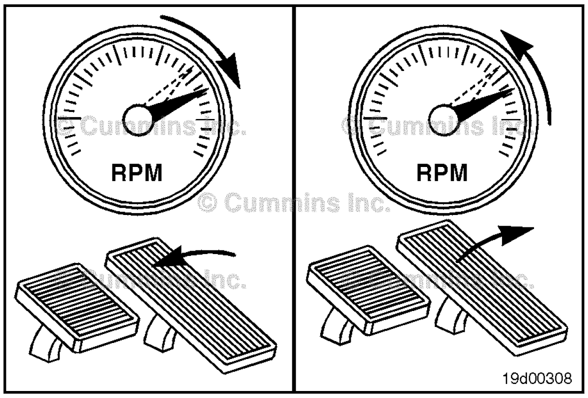

PTO Accelerator Override

Some applications require the ability to override the PTO set speed with the accelerator to increase engine speed without disengaging the PTO function. When the accelerator override in PTO feature is enabled, the engine speed can be increased above the current PTO operating speed by depressing the accelerator. Engine speed can **only** be overridden up to the maximum accelerator override in PTO speed. If the accelerator is released, the engine speed will return to the PTO set speed that was in effect before the accelerator override event.

Brake and Clutch PTO Disable

The brake override in PTO disable feature allows the operator to exit PTO operation if the brake is activated.

The clutch override in PTO disable feature allows the operator to exit PTO operation if the clutch pedal is depressed.

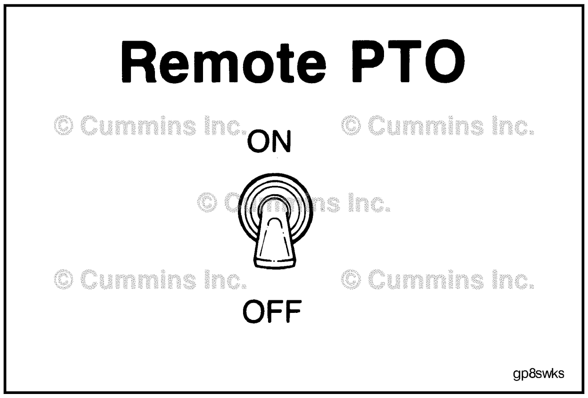

Remote PTO

The remote PTO feature allows the PTO mode to be activated from a separate remote switch. Remote PTO can have up to five different set speeds depending upon how many times the switch is toggled from OFF to ON before being left in the ON position.

Example: To obtain remote PTO set speed 3, rapidly toggle the remote PTO ON/OFF switch from OFF to ON three times and leave it in the ON position on the last cycle.

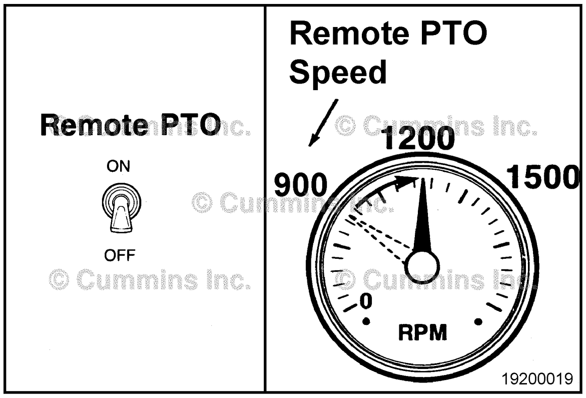

Remote PTO speeds 1 through 5 are the possible engine speeds when the remote PTO is enabled. The remote PTO has higher priority than the cab PTO so it will control engine speeds in cases when both the cab and remote PTO are enabled.

Downloaded from www.Manualslib.com manuals search engine

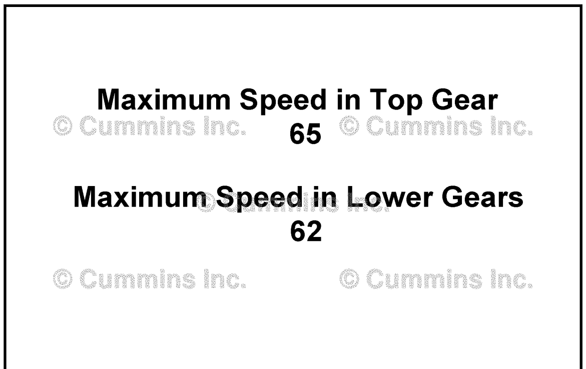

19200020

Gear Down Protection

The gear down protection feature limits the vehicle speed in the lower gears. The maximum vehicle speed in the lower gears is set at a lower mph than the maximum vehicle speed in the top gear. This encourages driving in the top gear for better fuel economy. The parameters gear down maximum vehicle speed, light engine load, and heavy engine load are associated with this feature.

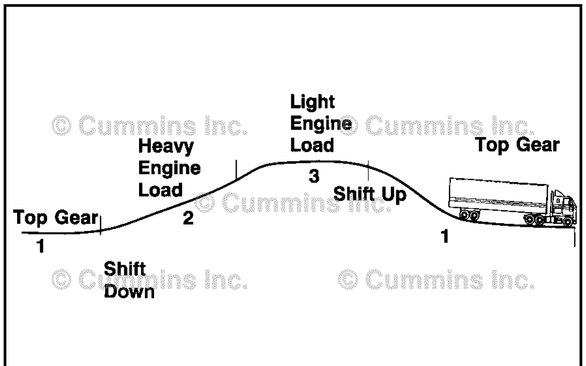

19200006

This feature allows the operator to down shift from top gear to the next lower gear under heavy load and maintain a speed higher than the gear down speed. This allows the operator to keep the vehicle momentum up by using a lower gear to maintain a high engine speed when going uphill. As soon as the engine load drops off (e.g., going downhill) or the operator down shifts to another lower gear, then the vehicle speed limit will ramp back down to the light load gear down speed limit. The driver will then have to up shift back into top gear to reach the maximum vehicle speed limit.

19800633

Top Transmission Gear Ratio

The top transmission gear ratio parameter is needed for gear down protection to work properly with double overdrive transmissions. This parameter will also be used by the trip information system to record the percentage of distance traveled in top gear.

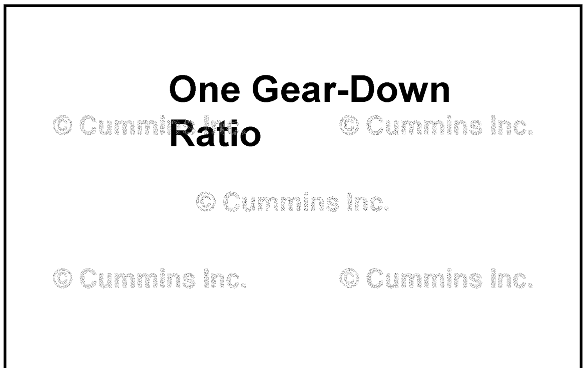

19800634

One Gear Down Gear Ratio

The one gear down gear ratio parameter is used to tell the ECM the first gear down gear ratio of the transmission.

Downloaded from www.Manualslib.com manuals search engine

Gear Down Maximum Vehicle Speed, Light Engine Load

This is the maximum vehicle speed (3) for operating one gear below top gear during light engine load operations. This value can **not** exceed gear down maximum vehicle speed, heavy engine load (2).

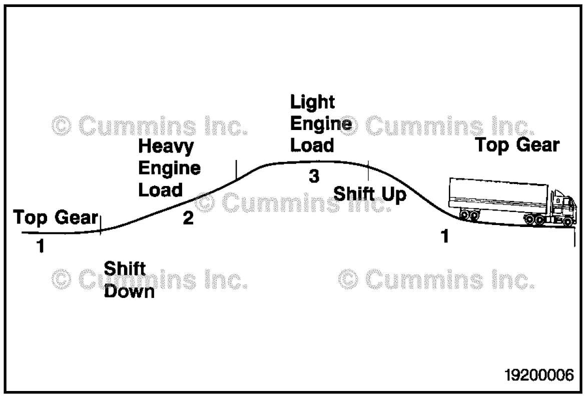

Gear Down Maximum Vehicle Speed, Heavy Engine Load

This the maximum vehicle speed (2) for operating one gear below top gear during heavy engine load operations. This value can **not** exceed maximum vehicle speed in top gear (1).

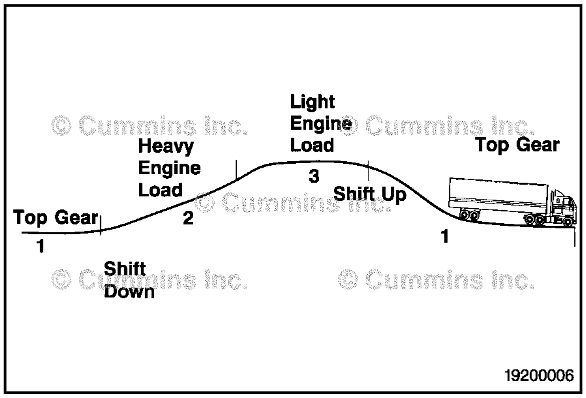

Powertrain Protection

This feature can limit engine output torque depending upon transmission gear ratio. This feature helps protect the drivetrain when lower gears are engaged. Engine torque limits based on transmission gear ratio can be adjusted using the INSITE™ service tool. This feature can also limit the maximum engine torque when a switched input to the ECM is activated. This allows the operator, or an automatic switching device, to limit engine torque under certain operating conditions, such as operation of an auxiliary device. This feature can also be configured to limit torque during heavy load conditions. This allows full torque output at light load conditions and limits torque output when the engine is heavily loaded. An example of a torque limit table is illustrated.

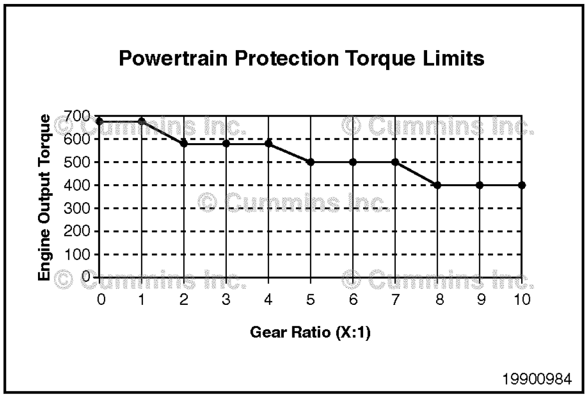

Automotive/Variable Speed (VS) Governor

The automotive/variable speed (VS) governor feature gives the owner a choice of engine governors. The automotive governor allows a larger speed variation under varying load conditions for a given accelerator position. The VS governor maintains a constant engine speed for a given accelerator position under varying load conditions.

Downloaded from www.Manualslib.com manuals search engine

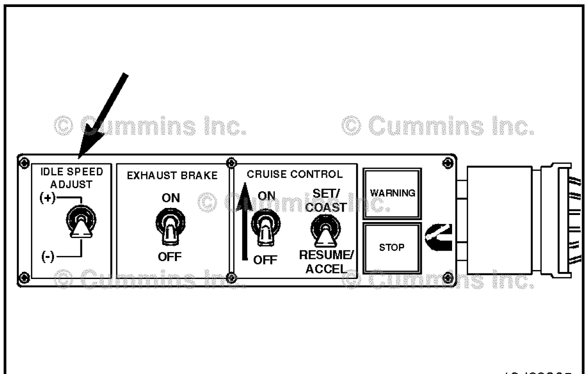

19d00265

Low Idle Speed

This parameter is the engine speed at which the engine will idle. This speed can be adjusted by a cab switch if the switch is installed and the low idle adjustment feature is enabled.

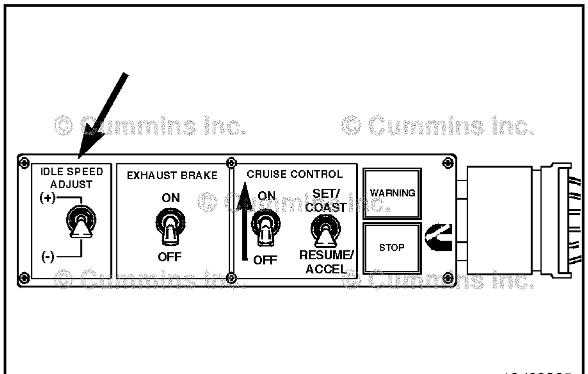

19d00265

Low Idle Adjustment

This feature allows the idle speed range to be increased or decreased in 25 rpm increments with the in-cab increment or decrement switch. There are limits on how high or low the low idle speed can be adjusted. The allowable adjustment range for a ISB/QSB engine is 700 to 1000 rpm.

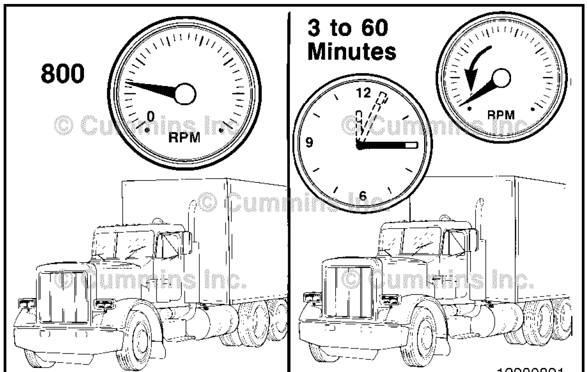

19900891

Idle Shutdown

The feature automatically shuts off an engine after a period of engine idling when there is no activity from the driver, such as clutch, brake, or accelerator actuation.

The idle shutdown system will **not** be active at coolant temperatures below 37.8°C [100°F].

After an engine has been automatically shut off, the key **must** be turned off for five seconds before attempting a restart.

NOTE: This feature will shut off the engine **only**. It will **not** remove power from other accessories powered by the keyswitch and these can cause a drain on the battery.

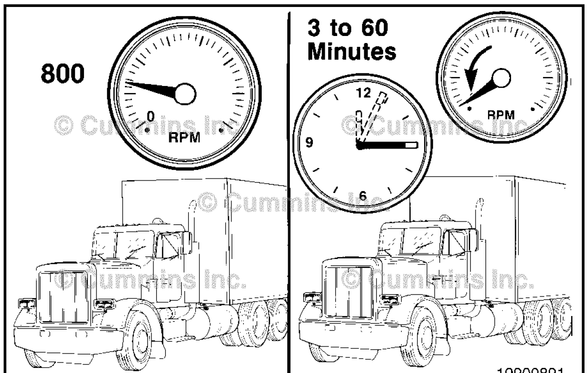

19900891

Idle Shutdown Time

Idle shutdown time is the period of engine idling time when there is no activity from the driver, such as clutch, brake, or accelerator actuation, before the engine automatically shuts off.

NOTE: This parameter will **not** appear if the idle shutdown feature is turned off.

Downloaded from www.Manualslib.com manuals search engine

Idle Shutdown in PTO

The idle shutdown in PTO feature automatically shuts off the engine after a period of PTO or remote PTO operation in which there is no activity from the driver, such as clutch, brake, or accelerator actuation.

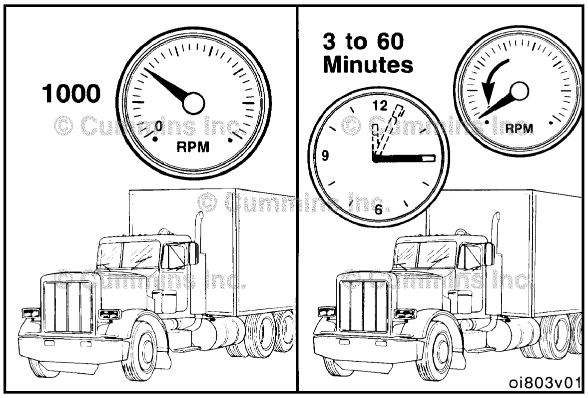

Idle Shutdown Override

The idle shutdown override feature allows the driver to override the idle shutdown by changing the position of the brake, clutch, or accelerator.

After the idle shutdown feature has been overridden, this feature will **not** shut off the engine again until the vehicle has been moved.

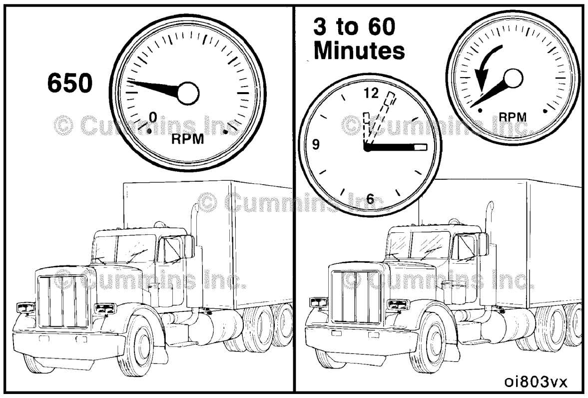

Engine Protection System

The ISB/QSB engines are equipped with an engine protection system. The system monitors critical engine temperatures and pressures and will log diagnostic faults when an over or under normal operation condition occurs. If an out-of-range condition exists and engine derate action is to be initiated, the operator will be alerted by an in-cab warning light. The warning light will blink or flash when out-of-range conditions continue to get worse. The driver **must** pull to the side of the road, when it is safe to do so, to reduce the possibility of engine damage.

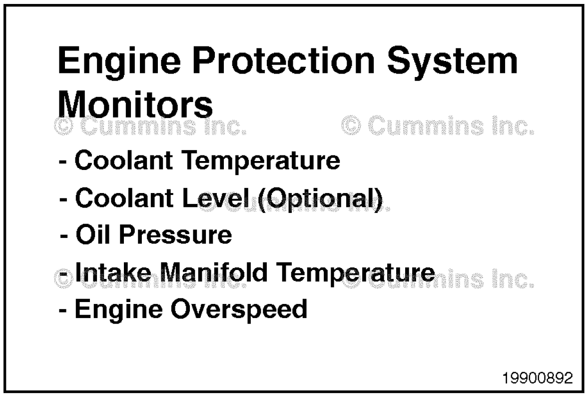

NOTE: Engine power and speed will be gradually reduced, depending upon the level of severity of the observed condition. The engine protection system will **not** shut down the engine unless the engine protection shutdown feature has been selected.

Downloaded from www.Manualslib.com manuals search engine

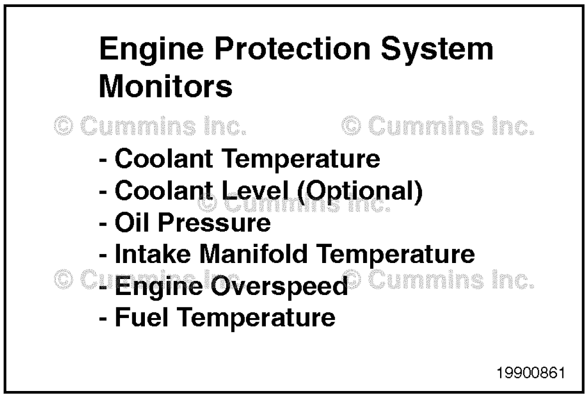

Engine Protection Shutdown

The engine protection shutdown feature automatically shuts off the engine whenever monitored parameters indicate the engine is operating over or under normal operating conditions.

The red STOP lamp will flash for a calibrated period of time prior to shutdown to alert the driver.

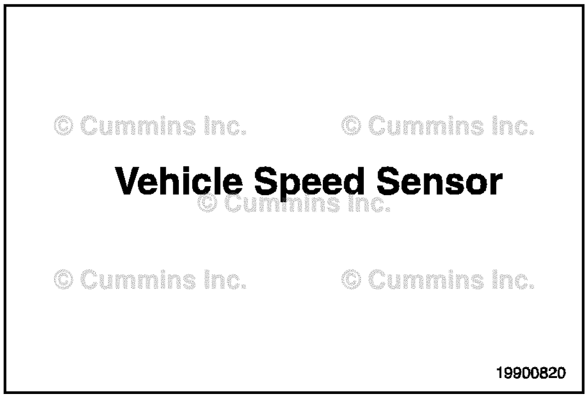

Vehicle Speed Sensor Type

The vehicle speed sensor (VSS) type parameter indicates the type of vehicle speed sensor being used by the ECM.

Maximum Engine Speed Without VSS

The maximum engine speed without VSS parameter sets the maximum engine speed allowed when no vehicle speed is detected.

Tire Revolutions Per Mile

The tire revolutions per mile parameter is used to tell the ECM how many times the tire will turn a full revolution in one mile.

Downloaded from www.Manualslib.com manuals search engine

Rear Axle Ratio

This parameter tells the ECM the gear ratio of the rear axle.

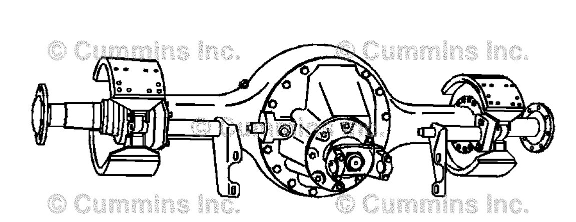

19901021

Number of Transmission Tailshaft Gear Teeth

This parameter tells the ECM the number of gear teeth on the transmission tailshaft.

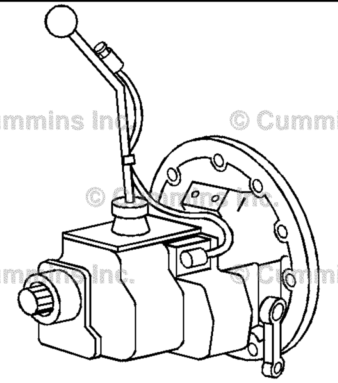

19901022

VSS Anti-Tampering (Fault code 242)

This feature gives the customer the option of disabling Fault Code 242.

NOTE: Fault Code 242 is logged when an invalid or inappropriate vehicle speed signal is detected by the ECM indicating an intermittent connection or signal tampering. This fault code is **not** a guarantee that vehicle speed sensor tampering has been performed.

VSS Anti-Tampering (Fault Code 242) - (Y/N)

19900825

Fan Clutch Enable

The ECM can control the cooling fan based on inputs from the coolant temperature sensor and the intake manifold temperature sensor.

Some applications will also provide inputs to the ECM for auxiliary device cooling (e.g., air conditioner pressure, power steering temperature, transmission temperature) or a manual fan switch for fan control.

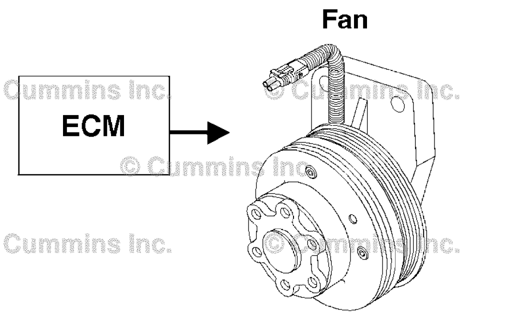

19900862

Downloaded from www.Manualslib.com manuals search engine

Air Conditioner Pressure Switch Input

The air conditioner pressure switch input feature allows for the air conditioner pressure switch input to be disabled if that input into the ECM is **not** being used. Select this feature if the air conditioner pressure switch input into the ECM is being used.

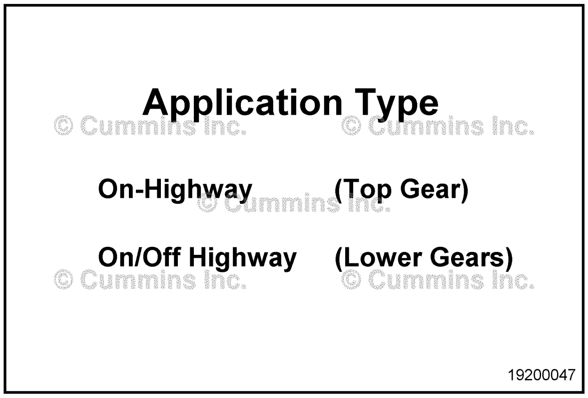

Application Type

The application type feature selection tells the ECM what type of application is being used in this vehicle. Choose between on-highway or on/off-highway. On-highway applications are those that use top gear for the majority of its operations. On/off-applications are those that use gears lower than top gear for the majority of its operations.

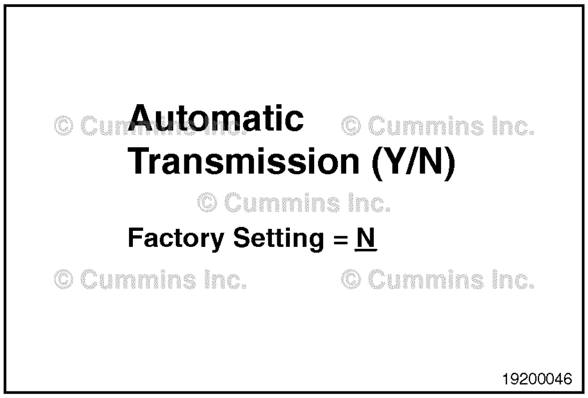

Automatic Transmission

The automatic transmission feature tells the ECM what type of transmission is used in the vehicle. The transmission is either manual or automatic.

Downloaded from www.Manualslib.com manuals search engine

User Activated Datalogger

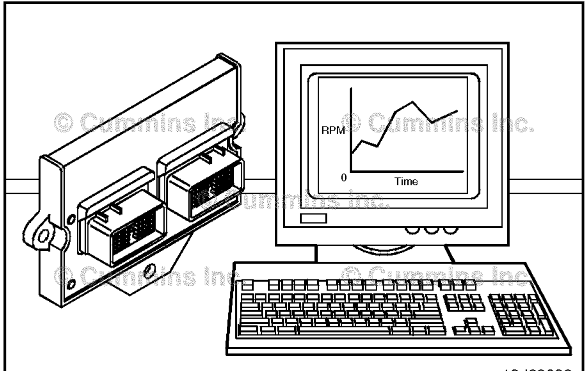

19d00630

The user activated datalogger feature is aimed at improving troubleshooting capabilities and providing better assistance in troubleshooting intermittent problems. This is accomplished through use of an internal ECM datalogger to capture data while the problem is occurring. The INSITE™ electronic service tool is used to configure the feature for the specific type of problem that exists. Once the feature has been configured, the vehicle or machine can be put into operation.

When the problem occurs, the ECM datalogger is activated and stores data in the ECM. This data can be analyzed using the INSITE™ service tool. Once the problem has been resolved, the ECM can be reset using the INSITE™ electronic service tool and the data will be cleared.

The ECM can store up to two occurrences of a specific problem. These occurrences are known as Event 1 and Event 2. Event 1 data is the first occurrence of a specific problem and is stored as a baseline. Additional occurrences are stored in Event 2. Event 2 data get overwritten each time a new occurrence happens until the ECM is reset.

For example, if a high coolant temperature condition happened five times, the first occurrence would be stored in Event 1 and the fifth occurrence would be stored in Event 2. The second, third, and fourth occurrences were stored in Event 2 but were overwritten each time the next event occurred.

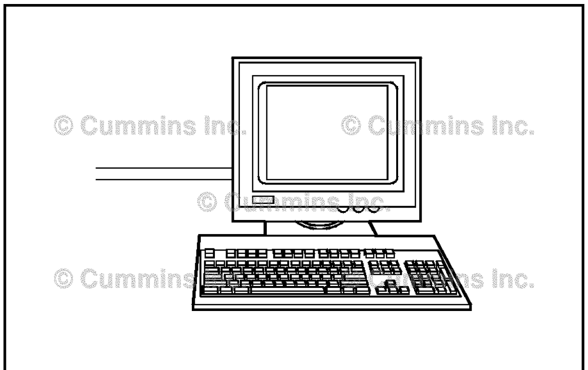
19800902

Both Event 1 and Event 2 data are stored in a before/after manner where half the data logged is pre-trigger information and the other half the data is logged post-trigger information. This is designed to give the user a snapshot of what was happening right up the point when the problem occurred and right after as well.

The INSITE™ electronic service tool is used to configure the feature by specifying which parameters the ECM will log, sampling rate, activation mode, and triggers 1 through 4. The feature will need to be configured differently depending upon what type of problem is occurring. If an intermittent problem is occurring with no fault codes but the operator can determine when the problem happens, manual mode activation should be used. If a vehicle experiences fault codes intermittently or abnormal temperatures of pressure, automatic mode should be used.

Downloaded from www.Manualslib.com manuals search engine

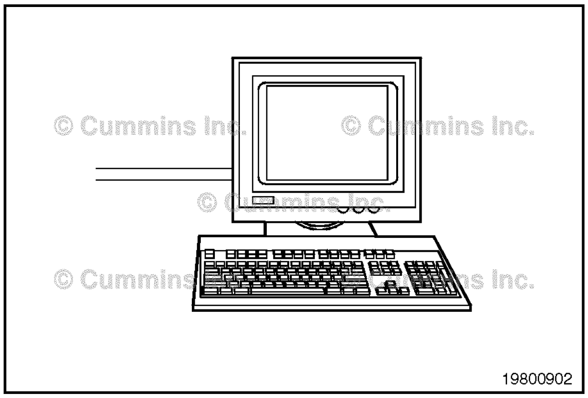

Manual Activation:

The INSITE™ electronic service tool is used to select manual mode and sampling rate and to log parameters. The vehicle can then be sent into operation. When the operator experiences the problem, turning on the diagnostic switch will activate the ECM to start logging data. The ECM will continue to log data until that event's ECM buffer is full. After the intermittent problem stops, the diagnostic switch should be turned off. This data will be stored in Event 1. The operator can keep collecting additional occurrences of the problem of which the most recent occurrence will be stored in Event 2. The INSITE™ electronic service tool can then be used to analyze the data.

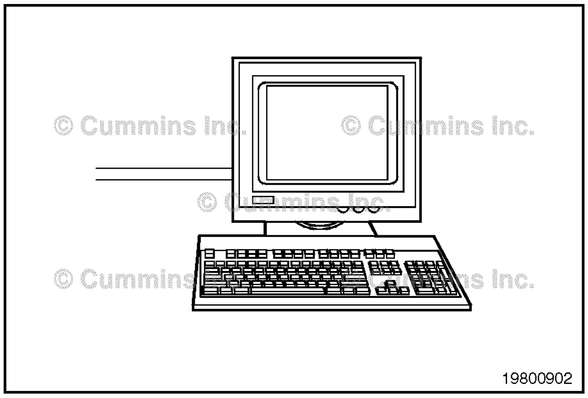

Automatic Activation:

Automatic mode allows the operator to define up to four triggers using the INSITE™ service tool. When these triggers become true, the ECM will be activated to log data. Each trigger can be configured to activate the ECM by either a fault code going active/inactive or a parameter going above or below a specified value. The INSITE™ electronic service tool is also used to select sampling rate and which parameters to log. When the ECM is activated the logged data is stored in the ECM in the same manner as manual mode.

The four triggers have and/or logic. This means that triggers 1 through 3 are used in conjunction with each other and trigger 4 is used as an alternate with triggers 1 through 3.

In detail, this means the following:

- If **only** trigger 1 is used, when the condition set for trigger 1 is true, the ECM will be activated to log data.
- If triggers 1 and 2 are used, both conditions have to become true before the ECM is activated.
- If triggers 1 and 2 and 3 are used, all three conditions have to become true before the ECM is activated.
- Trigger 4 is the "or" trigger. If trigger 4 is used with any combination of triggers 1 through 3, triggers 1 through 3 becoming true or trigger 4 becoming true will activate the ECM.

Downloaded from www.Manualslib.com manuals search engine

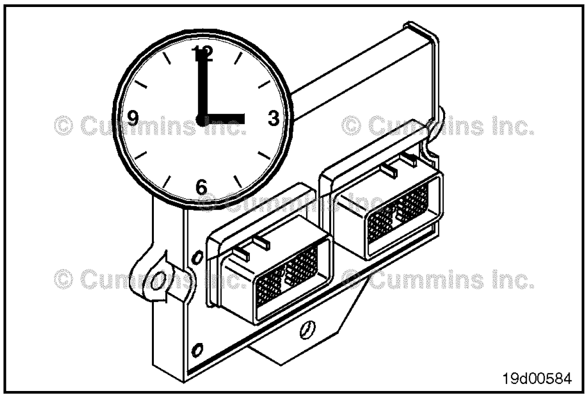

19d00584

Real Time Clock

The real time clock feature provides time/date stamping of operational events, such as fault codes, audit trails, and engine protection data.

The real time clock is contained within the ECM and will stamp events in units of year, month, day of month, hour, minute, and second. If the clock loses power, a diagnostic fault code will be triggered. Upon loss of power, the real time clock will be initialized with the last known real time.

The INSITE™ electronic service tool can be used to enable the real time clock feature and set the ECM clock. The auto set feature can be selected which will automatically set the ECM clock to the current time/date of the PC.

NOTE: Once the real time clock feature has been enabled in the ECM it can **not** be disabled.

19d00627

Vehicle Anti-Theft Protection

The anti-theft feature prevents the engine from starting until a password is entered in the ECM using Cummins® RoadRelay™ or the INSITE™ service tool. Once deactivated, the engine can be started.

The anti-theft feature will prevent the engine from starting **only** if the feature is enabled and the feature is activated. The feature can **only** be activated when the engine is idling or keyed on and **not** running. This feature has three separate functions:

- antilock
- Throttle lock
- Hijack.

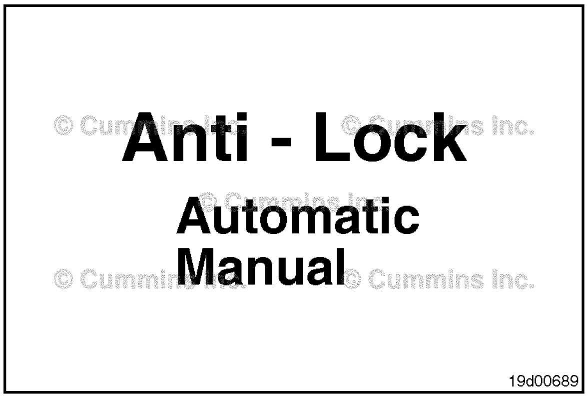

19d00689

antilock

There are two user selectable modes of operation:

- Automatic
- Manual.

In automatic mode, the engine is **always** locked by the ECM at each engine shutdown. No password is required to activate anti-theft. A password is required to deactivate anti-theft. This feature will **not** lock automatically if the engine stopped because of an unintended stall.

Downloaded from www.Manualslib.com manuals search engine

Manual mode activation requires operator action to lock the engine. The user is prompted to activate the security by answering a YES/NO question. If the user answers YES, the user **must** then key on the engine. If a PIN is required (user selectable option), the user is prompted to enter the correct PIN to activate anti-theft. If no PIN is required, the anti-theft is activated by default.

There are six user passwords capable of locking or unlocking the engine. These are stored in the ECM and adjusted by the INSITE™ service tool.

A fault will be logged and a RED dash lamp will flash if the anti-theft feature is active and an attempt to start the engine is made.

19d00690

Throttle Lock

With the engine idling, the user can activate the feature by entering the PIN. The engine will then ignore throttle input until a valid password is reentered. If the feature is activated while the engine is idling and if vehicle speed is greater than zero, the engine will be shut down. The engine can also be shut off by the keyswitch. The engine will **not** restart until a valid password is entered.

Hijack

A special hijack function will allow the engine to be temporarily unlocked. This functionality is to counter a hijacking event when a hijacker forces the operator to input the password and the hijacker takes off with the vehicle. This feature is customer selectable. When enabled, a special hijack code may be entered that will allow the vehicle to be driven for a customer programmable amount of time, then to idle for a customer programmable amount of time, and shut down. Once the vehicle has shut down, the special hijack code will **not** restart the engine. Once the vehicle has shut down, one of the six passwords **must** be entered to restart the engine.

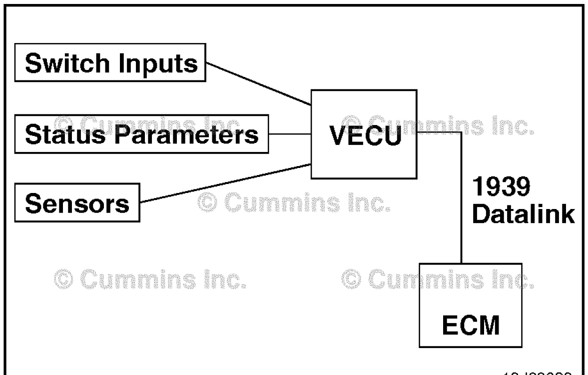

19d00629

J1939 Multiplexing

The J1939 multiplexing feature gives the ability to send and receive messages over the J1939 datalink instead of hard wire connections. This is accomplished by using a vehicle electronic control unit. Inputs from switches, status parameters, and sensors can be hardwired into the vehicle electronic control unit. The vehicle electronic control unit can then broadcast the information from these switches and sensors via the J1939 datalink to the other ECMs on the vehicle system. The Cummins® ECM is one of the control modules connected to the vehicle system through the J1939 datalink.

Downloaded from www.Manualslib.com manuals search engine

The INSITE™ electronic service tool can be used to enable or disable this feature. When the feature is disabled the ECM will **not** recognize any multiplexed input into the ECM. When the feature is enabled the ECM can be configured to receive a multiplexed signal for the following parameters:

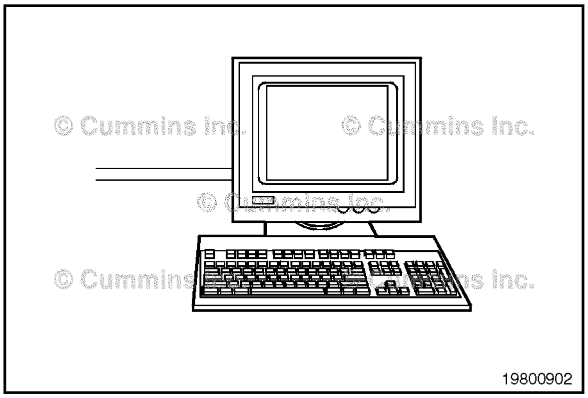

- Air Conditioner Pressure Switch
- Service Brake Switch
- Clutch Switch
- Cruise Control ON/OFF Switch
- Cruise Control Resume Switch
- Cruise Control Set Switch
- PTO ON/OFF Switch
- PTO Resume Switch
- PTO Set Switch
- Remote PTO Switch
- Idle Increment/Decrement Switch
- Diagnostic Switch
- Torque Derate Switch
- Manual Fan Switch
- Engine Brake Switch
- Accelerator Pedal Position
- Idle Validation - On Idle/Off Idle
- Remote Accelerator Switch
- Remote Accelerator Position
- Wait-to-Start Lamp Status
- Water-in-Filter Lamp Status.

This feature will be configured by the OEM. If the Cummins® ECM is **not** capable of communication and a new ECM is required, a review of the customer configuration records should be used to determine how the feature should be configured in the new ECM.

Dual Outputs

The dual outputs feature, also known as switched outputs based on sensed inputs, allows the ECM to control one or two driver outputs based on input from up to 14 parameters.

The feature can also be configured to shut down the engine based on customer specified values of up to 14 of the same input parameters.

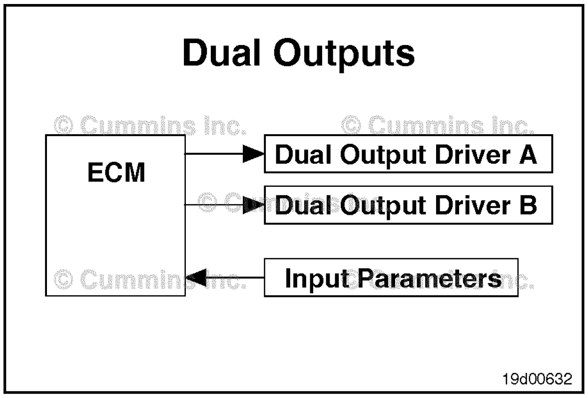

Downloaded from www.Manualslib.com manuals search engine

The 14 input parameters are:

A Intake Manifold Temperature

B Engine Speed

C Commanded Fueling

D Intake Manifold Pressure

E Vehicle Speed

F Engine Coolant Temperature

G Engine Oil Pressure

H PTO Status

I OEM Switch

J OEM Sensor

K Throttle

L Ambient Air Pressure

M Remote Throttle

N Fuel Rate.

The dual outputs feature can be enabled or disabled by using the INSITE™ service tool. The feature configuration, which defines what inputs and outputs are used, is specified by the customer or OEM.

The configuration can **not** be changed with the INSITE™ service tool.

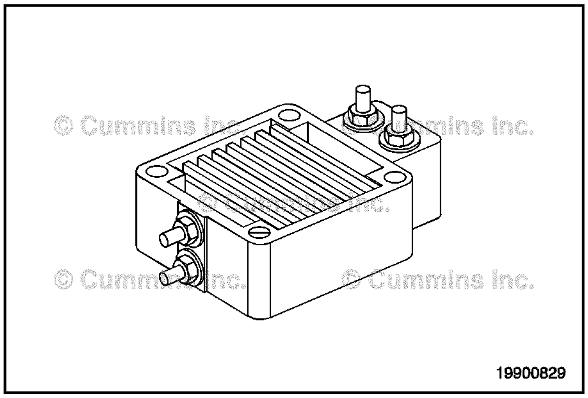

Intake Air Heater

The intake air heater feature controls the heating elements that are located in the engine's intake air stream. These elements heat the intake air when starting the engine in cold ambient conditions. Start ability and white smoke control are enhanced by the use of an intake air heater. A wait-to-start lamp is located on the operator's controls to indicate when to crank the engine.

Downloaded from www.Manualslib.com manuals search engine

The ECM checks intake manifold temperature to determine how long to energize the air heater before extinguishing the wait-to-start lamp (this is for the preheat phase).

Once the engine is started, the heater will be energized again for a time period determined by intake air temperature and fuel temperature (this is for the postheat phase).

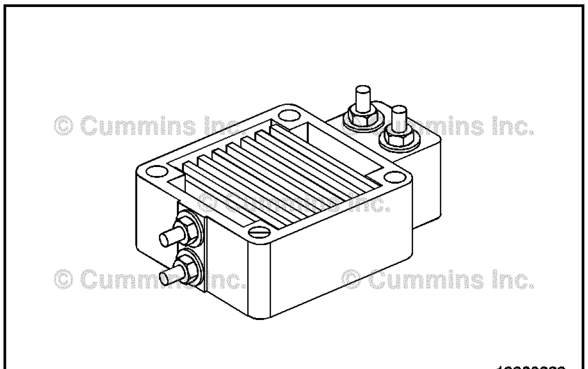
19900829

Water-in-Fuel (WIF) Sensor

The water-in-fuel sensor is located in the fuel filter housing. Once the storage space in the bottom of the filter housing fills with a certain amount of water, the sensor will signal the ECM. A water-in-fuel lamp will illuminate at the operator controls indicating that the water **must** be drained from the fuel filter assembly.

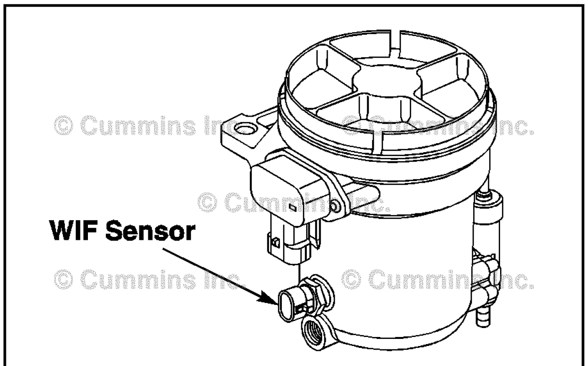

19900830

Electric Lift Pump

The ECM controls the electric lift pump which is located between the fuel tank and the injection pump. Whenever the keyswitch is turned on, the lift pump will be energized for a few seconds to make sure that the low pressure fuel lines are fully primed.

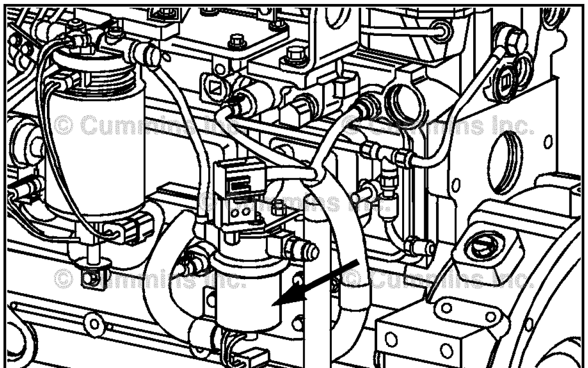
19900831

The electronic control system can provide many features that are integrated into the vehicle's operation. Some of these features can be adjusted or turned on and off with a service tool, but some are set at the factory and can **not** be changed.

The following section describes the functionality of each feature and whether an available feature in a given application is calibration-dependent.

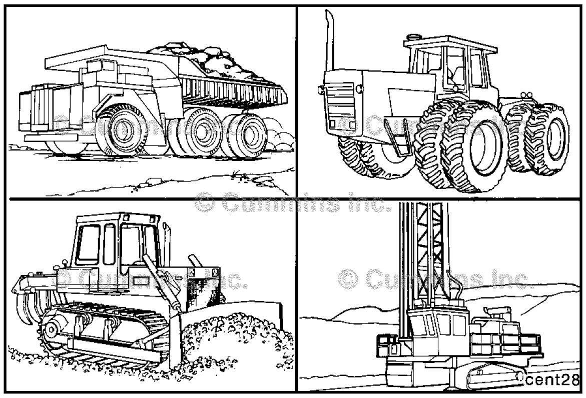
cent28

Downloaded from www.Manualslib.com manuals search engine

Maintenance Monitor Data

Maintenance Monitor Data

Percent of Current Maintenance Interval	XXX.X%
Time Since Last MM Reset	XXXXX Hrs.
Fuel Burned Since Last MM Reset	XXXX Gal.
Current MM Mode	XXXX

19d00575

Using the INSITE™ service tool, the following maintenance data can be viewed or printed from the ECM:

- Percent of current interval consumed (by time or fuel burned)
- Time since last reset
- Fuel burned since last reset
- Current maintenance monitor mode.

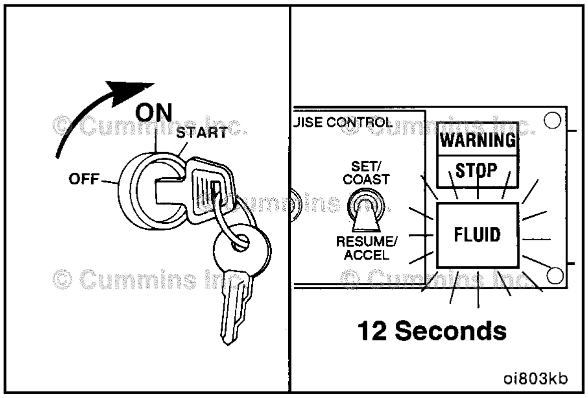

Alerting the Operator

The maintenance monitor will alert the operator of the need to change oil by flashing the FLUID lamp for approximately 12 seconds after keyswitch is turned on. The flashing sequence will be three quick flashes followed by a pause. This flash sequence will go through five cycles in the 12-second period. This sequence will occur every time the keyswitch is turned on until the maintenance monitor has been reset.

NOTE: The diagnostic switch **must** be in the OFF position for the flashing sequence to occur.

Maintenance Monitor Reset Log

Maintenance Monitor Reset Log 1

	Maximum Threshold	Adjusted Threshold	Interval Reset@
Fuel:	XXXX	XXXX	XXXX
Time:	XXXX	XXXX	XXXX

19d00576

The maximum threshold is entered by the user either directly using the time mode, or by entering the interval factor in the automatic mode.

The adjusted threshold is the new threshold set automatically by the maintenance monitor when the automatic mode is selected, and it automatically reduces the maintenance intervals.

The "interval reset at" is the interval time and fuel recorded by the ECM at the time the maintenance monitor was reset.

Maintenance Monitor Reset Log 2

	Cumulative Reset @	Possible Error
Fuel:	XXXX	XXXX
Time:	XXXX	XXXX

19d00577

The "cumulative reset at" is the total time and fuel recorded by the ECM at the time the maintenance monitor was reset.

The possible error will contain an "X" next to a row of data that can be inaccurate due to a system fault. The "X" will be triggered when a vehicle speed sensor fault or power-down fault occurs. These faults can cause data to either **not** accumulate or accumulate inaccurately.

Downloaded from www.Manualslib.com manuals search engine

Maintenance Monitor Reset

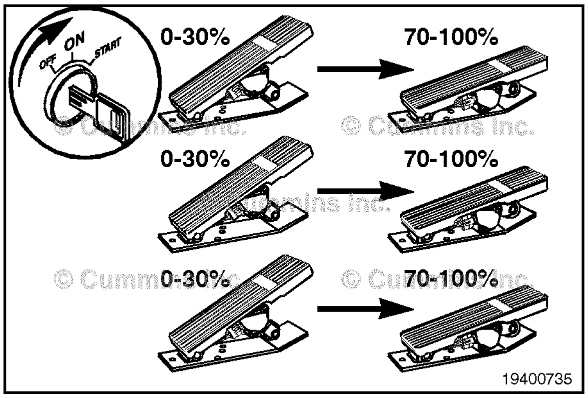

The maintenance monitor reset can be accomplished by clicking the reset button on the maintenance monitor screen using the INSITE™ service tool, or using one of the following procedures:

1) Procedure for applications **with** a throttle pedal.

a Turn the keyswitch to the ON position (but do **not** start the engine) and turn the diagnostic switch to the ON position.

b Fully depress the throttle pedal (100 percent) for at least 3 seconds and then release it.

c Fully depress the throttle pedal (100 percent), twice, for less than 3 seconds each time.

d Fully depress the throttle pedal (100 percent) for at least 3 seconds and then release it.

2) Procedure for applications **without** a throttle pedal.

a Turn the keyswitch to the ON position (but do **not** start the engine).

b Turn the diagnostic switch to the ON position for at least 3 seconds and then turn it to the OFF position.

c Turn the diagnostic switch to the ON position (for less than 3 seconds) and then to the OFF position, twice, with less than 3 seconds between each switching.

d Turn the diagnostic switch to the ON position for at least 3 seconds and then turn it to the OFF position.

NOTE: Procedure **must** be completed within 20 seconds after initiating steps 1) a through d or steps 2) a through d or the data will **not** reset.

NOTE: The WARNING lamp will flash three times to indicate that the reset has been completed.

Trip Information System

The trip information system records fuel consumption and time information for the engine during normal operation, and in certain operating modes such as intermediate speed control and idle. Either data can be displayed using the INSITE™ service tool. Some data can **not** be reset and reflect the performance of the engine over its lifetime. Other data, as well as trip data, can be reset using the INSITE™ service tool.

Downloaded from www.Manualslib.com manuals search engine

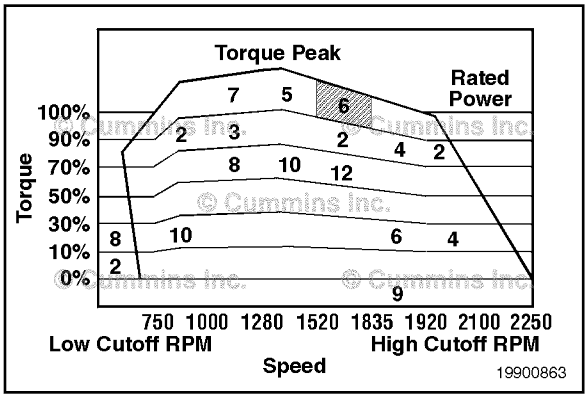

19900863

Duty Cycle Monitor

With this feature the ECM tracks engine load and speed. These data are stored in the ECM, and the INSITE™ electronic service tool is used to display the data. The INSITE™ electronic service tool display shows a duty cycle "map" that shows the whole engine's operating range in terms of speed and load. This "map" is divided into fifty regions. The percent of the engine operating time spent in each region is shown on the display.

The ECM contains duty cycle data for the whole life of the engine and for two 500-hour operating periods. The two 500-hour maps can be reset with the INSITE™ service tool.

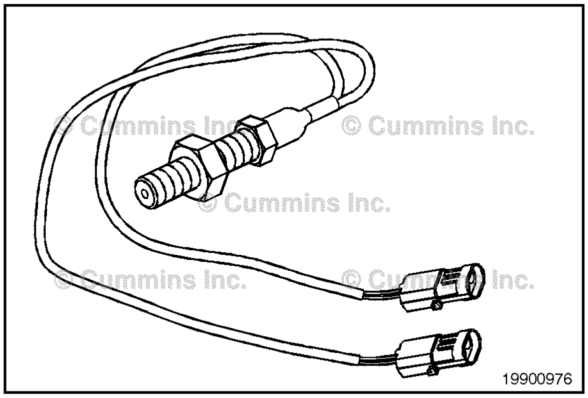

19900976

Vehicle Speed Sensor Type

The vehicle speed sensor (VSS) indicates the type of vehicle speed sensor being used with the ECM.

The vehicle speed sensor type can be adjusted with the INSITE™ service tool.

The sensor type is one of the following:

1 None

2 Magnetic

3 J1939 datalink

4 Other.

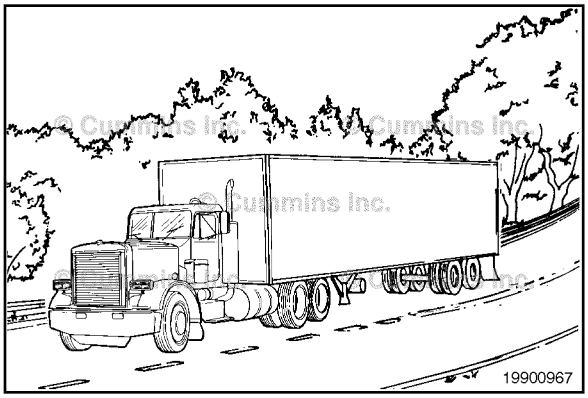

19900967

Tire Revolutions per Mile

This parameter indicates to the ECM how many times the tire will turn a full revolution in one mile.

Tire revolutions per mile can be adjusted using the INSITE™ service tool.

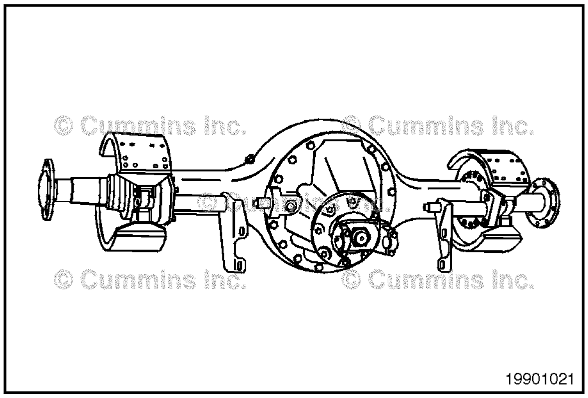

19901021

Rear Axle Ratio

This parameter indicates to the ECM the gear ratio of the rear axle.

Rear axle ratio can be adjusted using the INSITE™ service tool.

Downloaded from www.Manualslib.com manuals search engine

Number of Transmission Tailshaft Gear Teeth

This parameter indicates to the ECM the number of gear teeth on the transmission tailshaft.

The number of transmission tailshaft gear teeth can be adjusted using the INSITE™ service tool.

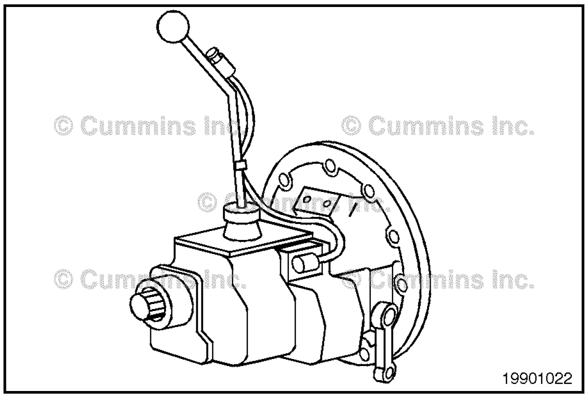

Road Speed Governor

The road speed governor limits the maximum road speed of the vehicle in top gear.

The maximum vehicle speed in top gear is the maximum road speed for the vehicle. This speed **must** be greater than or equal to the maximum cruise speed if the cruise control feature is enabled.

The maximum road speed in top gear can be adjusted by using the INSITE™ service tool.

NOTE: The auxiliary governor needs to be disabled to utilize the road speed governor.

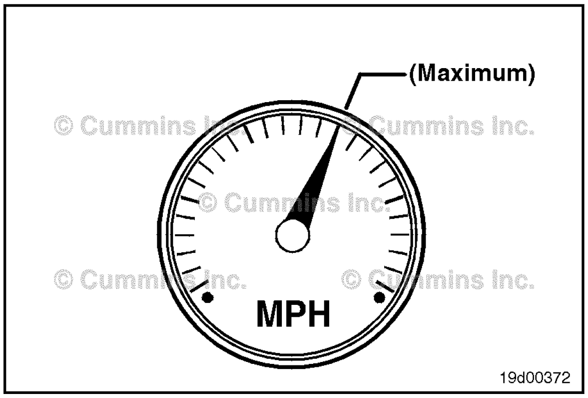

Cruise Control

⚠WARNING⚠

Do not use cruise control when the road is slippery, in heavy traffic, or when the weather is inclement. Loss of vehicle control can result.

The cruise control feature gives the driver the capability of a foot-off accelerator cruise operation. It is similar to an automobile's cruise control.

The cruise control feature can be enabled or disabled using the INSITE™ service tool.

NOTE: Both cruise control and intermediate speed control can **not** be active at the same time.

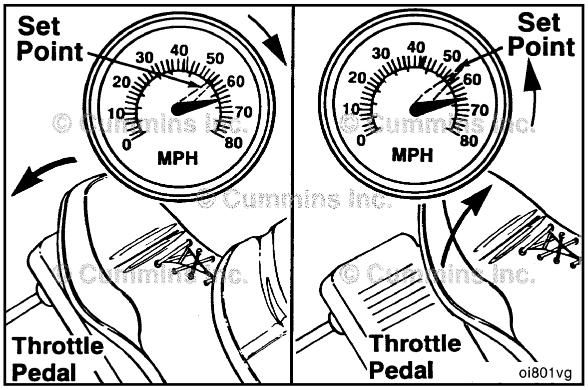

Maximum Cruise Control Speed

This speed is the maximum allowable cruise set speed.

The maximum cruise control speed can be adjusted using the INSITE™ service tool.

NOTE: The maximum cruise control speed can **not** exceed the maximum vehicle speed in top gear setting.

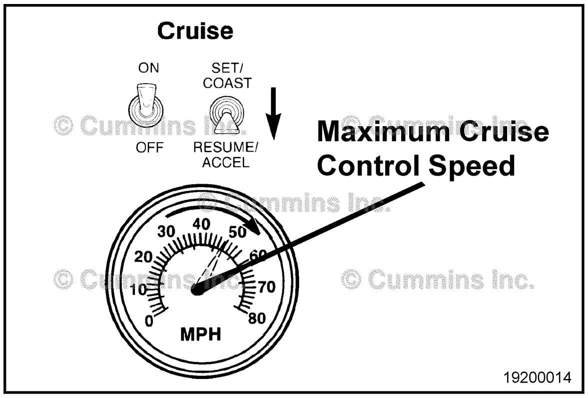

Downloaded from www.Manualslib.com manuals search engine

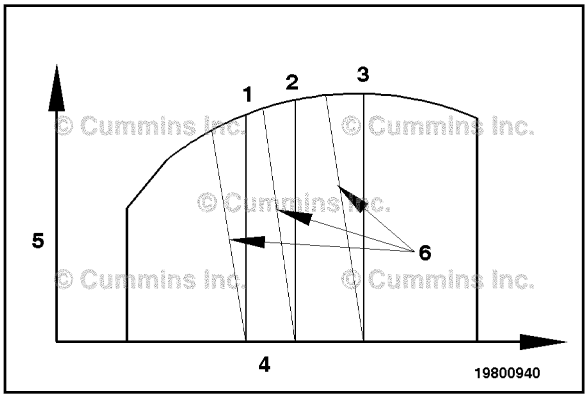

Intermediate Speed Control

The intermediate speed control feature controls the engine at a constant rpm. Up to three intermediate speed control set speeds (1, 2, and 3) can be selected depending on original equipment manufacturer (OEM) availability (the axis 4 equals engine speed and 5 equals engine torque).

NOTE: An additional five set speeds can be obtained through use of the variable intermediate speed input signal.

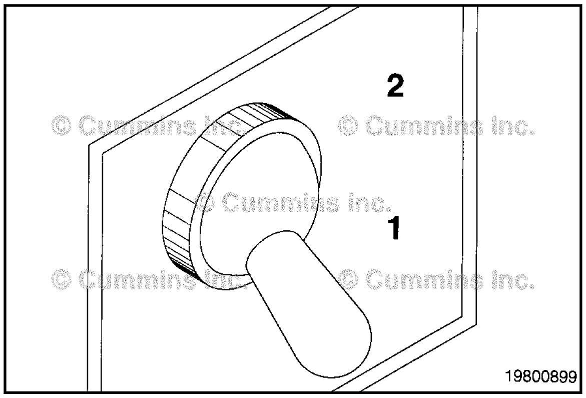

The intermediate speed control feature provides the ability to select an intermediate speed control set speed by an original equipment manufacturer (OEM)-provided switch (1 is the OFF position and 2 is the ON position), depending on original equipment manufacturer availability.

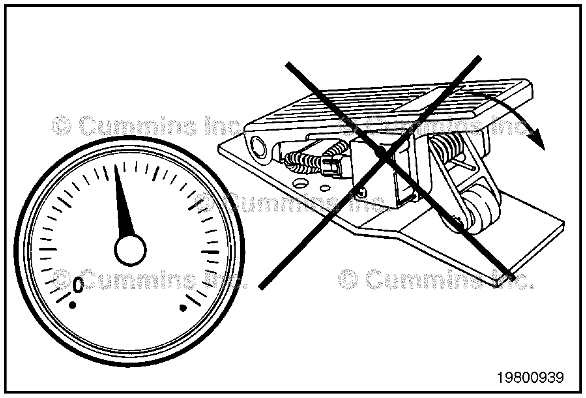

This feature will override the throttle and control the engine speed to the intermediate speed control speed setting. This feature allows throttle control above the set speed or below the set speed, according to the calibration setup.

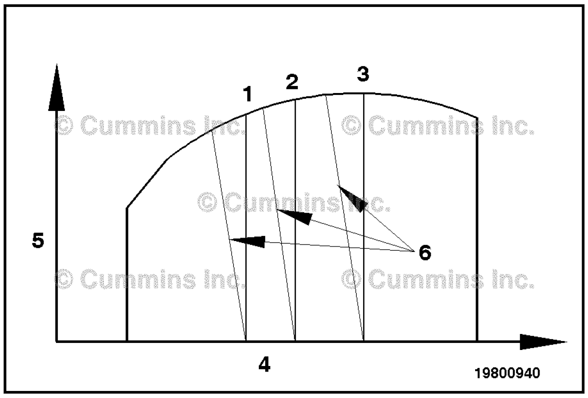

The intermediate speed control feature provides a single droop (6) for up to three intermediate speeds (1, 2, and 3). An additional five set speeds can be obtained through use of the variable intermediate speed input signal. This droop is independent of all other selectable droops and is enforced during intermediate speed control operation **only** (the axis 4 equals engine speed and 5 equals engine torque).

Downloaded from www.Manualslib.com manuals search engine

The intermediate speed control set speed can be adjusted by the intermediate speed control increment/decrement switch. Set speed changes using this switch will be saved to the engine control module (ECM) when the keyswitch is turned to the OFF position.

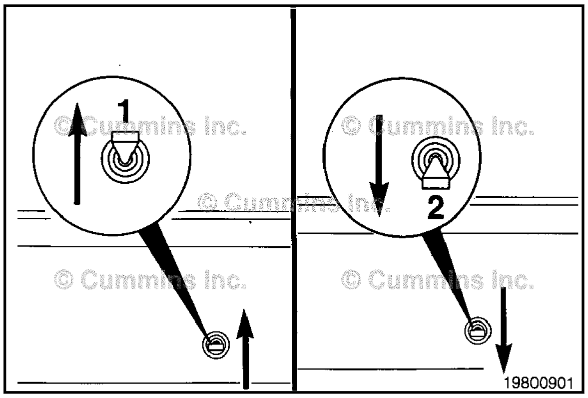

The intermediate speed control feature can be enabled or disabled using the INSITE™ electronic service tool if this feature is available in the calibration. The intermediate speed control set speeds (1, 2, and 3) can be adjusted using the INSITE™ electronic service tool along with the intermediate speed control droop.

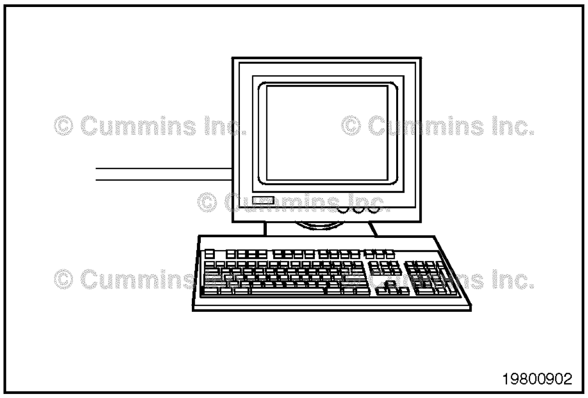

Hybrid Governor

The hybrid governor can be enabled or disabled with the INSITE™ electronic service tool if the feature is available in the calibration. The hybrid governor feature uses calibrated torque curves instead of the 100-percent throttle torque curve to limit fueling at partial-throttle auxiliary speed governor, and therefore achieves partial-throttle operation with the same power and torque rise characteristics of the full-throttle operation. It will allow the application to be operated in a more fuel efficient manner and with a greater capability of driving at partial throttle.

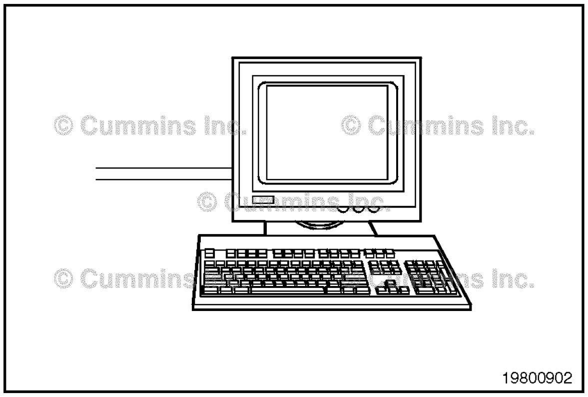

Auxiliary Speed Governor

The auxiliary speed governor is an application-specific feature that allows the engine to be governed by either an auxiliary speed or pressure signal. The feature uses a manual switch input to turn the governor operation on and off.

NOTE: The switch **must** go from OFF to ON position while the engine is running to activate this feature. It can **not** be on all the time.

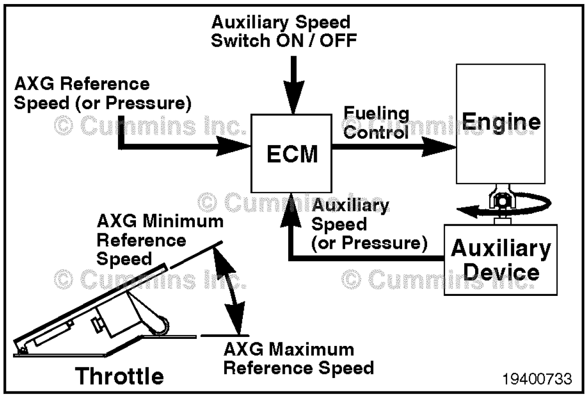

Downloaded from www.Manualslib.com manuals search engine

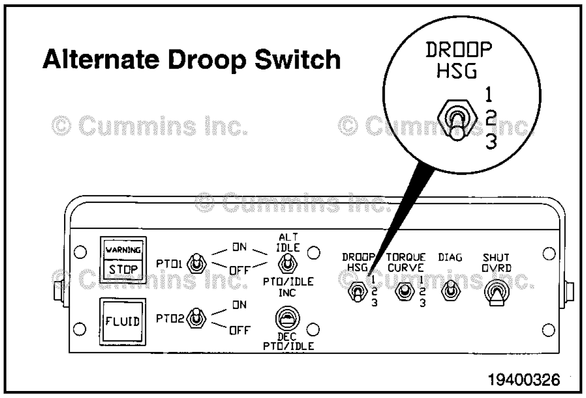

Depending on original equipment manufacturer (OEM) availability the alternate droop feature provides the ability to select up to two additional alternate droop settings by an original equipment manufacturer (OEM) provided switch.

The type of droop switch (position 1, position 2, and position 3) can be adjusted using the INSITE™ service tool.

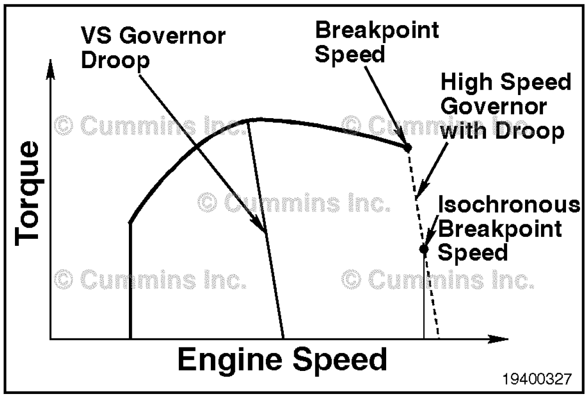

Each alternate droop setting provides the ability to select the high speed governor break point speed and droop percent. Droop percent at minimum and maximum throttle for the vehicle speed (VS) governor is also adjustable. The break point speed determines the position on the engine torque curve where high speed governor will start to limit engine torque output. Selection of the alternate droop feature is accomplished by using the INSITE™ electronic service tool if the alternate droop feature is available in the calibration.

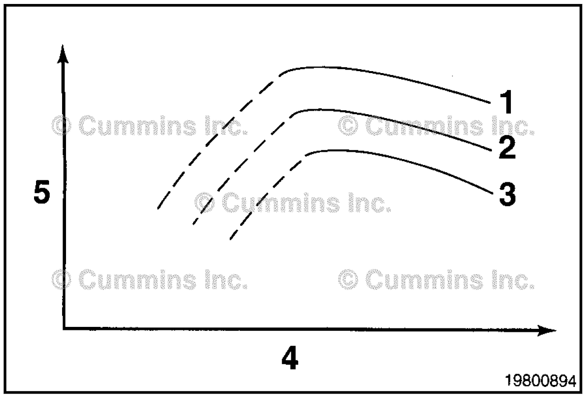

Switched Torque

The switched torque feature allows the operator to switch between the 100-percent throttle torque curve (1) and up to two derated torque curves (2 and 3). (The axis 4 is engine speed and 5 is engine torque.)

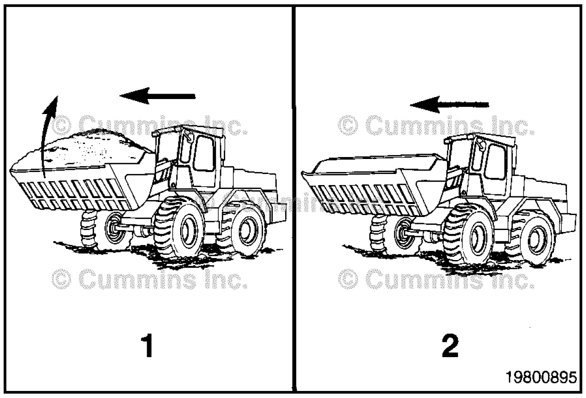

This feature improves operating efficiency in loaded (1) versus unloaded (2), as well as protecting the transmission and drivetrain.

Downloaded from www.Manualslib.com manuals search engine

Depending on original equipment manufacturer (OEM) availability the switched torque feature provides the ability to select two additional derated torque curves with an original equipment manufacturer (OEM)-provided switch.

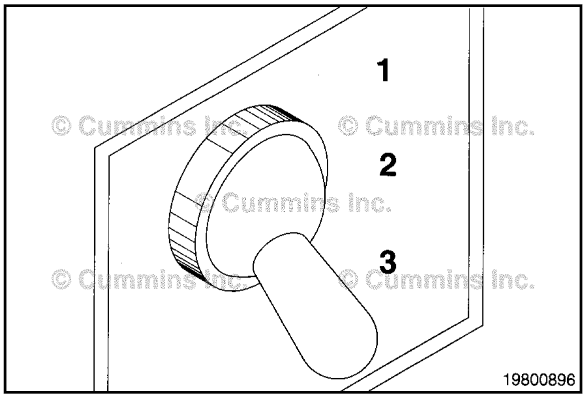

This feature can be enabled or disabled by using the INSITE™ electronic service tool if the alternate torque feature is available in the calibration.

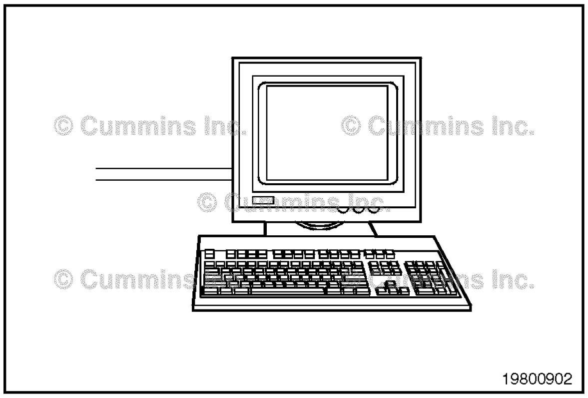

Boost Power

The boost power feature provides the operator with enhanced torque and power for a fraction of the operating period. If the feature is enabled, boost power can be engaged by a cab-mounted switch or automatically if the automatic boost power feature is enabled. The additional power is limited by a calibrated time period, thresholds for intake manifold temperature, coolant temperature, and engine speed.

NOTE: Boost power is **not** available continuously.

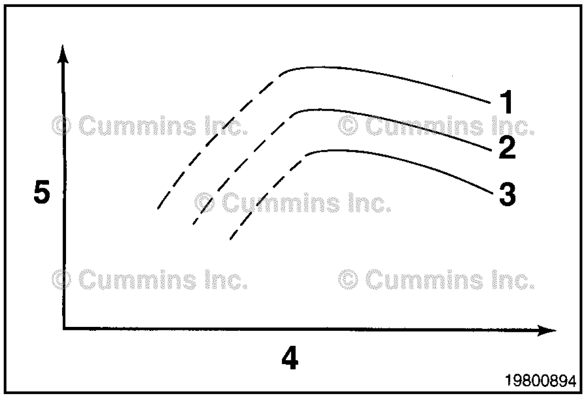

The INSITE™ electronic service tool can enable or disable the boost power feature if the feature is available in the calibration. The electronic service tool also monitor the cab-mounted boost power switch.

If the boost power feature is enabled, the boost power can be engaged by using a cab-mounted switch. When the automatic boost power feature is enabled, it automatically switches the engine to boost power curve based on the engine operating conditions, and no manual switch is needed.

The automatic boost power feature can be enabled or disabled using the INSITE™ service tool.

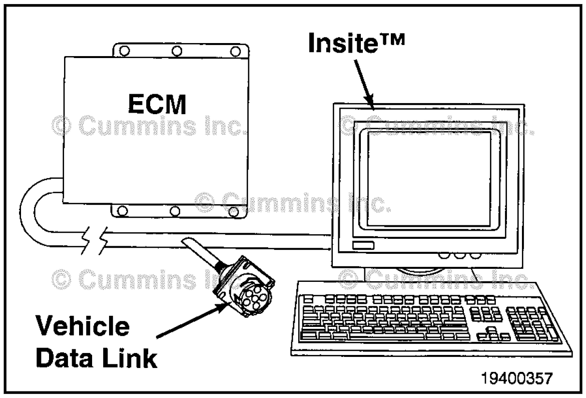

Downloaded from www.Manualslib.com manuals search engine

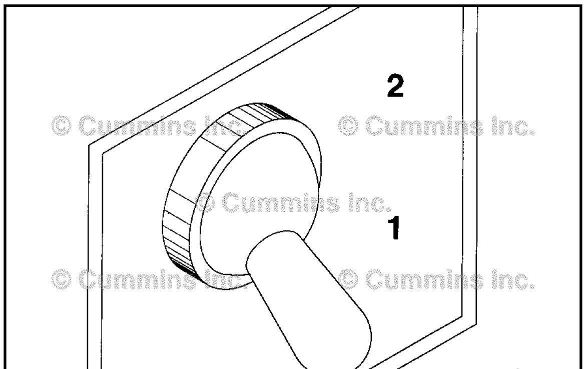

19800899

Remote Throttle

The remote throttle feature allows the operator to control the engine from a position other than the driver's seat. This feature is selected by the operator through an original equipment manufacturer (OEM) cab-mounted switch.

There are four modes available for the remote throttle feature. These modes can be adjusted using the INSITE™ service tool.

The remote throttle feature, if allowed, can be enabled or disabled using the INSITE™ electronic service tool if the feature is available in the calibration.

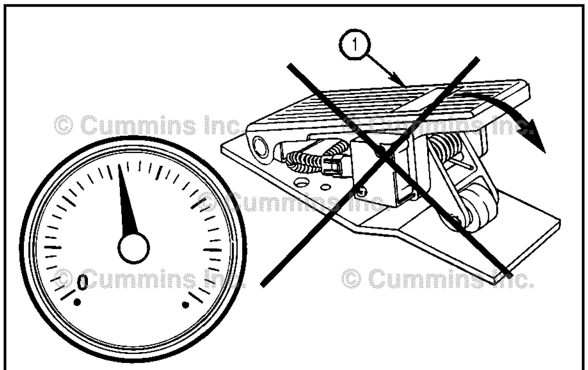

19d00578

Remote Throttle Mode One (default)

This mode will override the primary throttle (1) control and control the engine speed with the remote throttle setting.

NOTE: Remote throttle mode one does **not** employ idle validation and is intended for stationary applications, **only**.

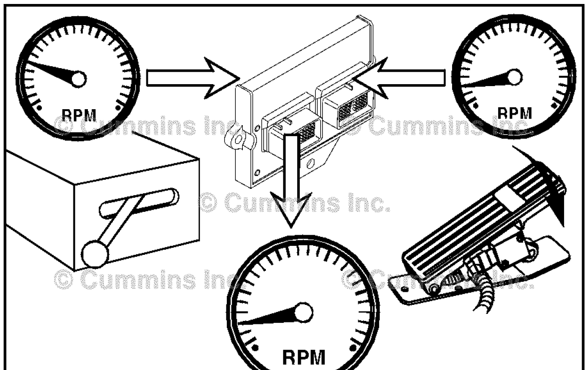

19d00579

Remote Throttle Mode Two (select minimum)

Remote mode two throttle is a select minimum throttle using two different throttles. One example is equipment that uses a hand throttle as your primary throttle and a foot throttle as a decelerating remote throttle. Remote mode two throttle is enabled when a minimum throttle value is sensed between the primary throttle and the remote throttle.

NOTE: Remote throttle mode two does **not** employ idle validation.

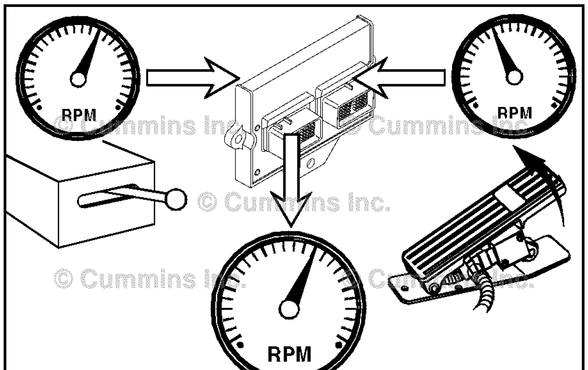

19d00580

Remote Throttle Mode Three (select maximum)

Remote mode three throttle is a select maximum throttle using two different throttles. One example is, equipment using a hand throttle as your primary throttle and a foot throttle as an accelerating remote throttle. Remote mode three throttle is enabled when a maximum throttle value is sensed between the primary throttle and the remote throttle.

NOTE: Remote throttle mode three does **not** employ idle validation.

Downloaded from www.Manualslib.com manuals search engine

Frequency Throttle

The frequency throttle feature converts a filtered throttle frequency input into a requested throttle percentage. The frequency throttle feature is applicable in industrial and marine applications in which a position (electronic or log signal) is **not** appropriate. The frequency throttle feature supports idle validation.

The frequency throttle feature can be enabled or disabled using the INSITE™ electronic service tool if the feature is available in the calibration.

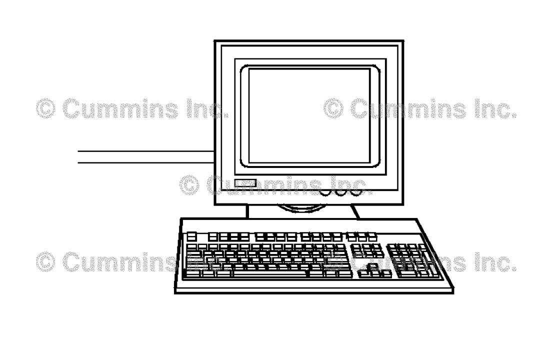

19800902

Multiple Unit Synchronization

The multiple unit synchronization feature allows two or more engines to be controlled by a single throttle signal. There are three engine configurations available with this feature. They are soft-coupled, hard-coupled, and soft-coupled marine.

The multiple unit synchronization feature can be enabled or disabled using the INSITE™ electronic service tool if the feature is available in the calibration.

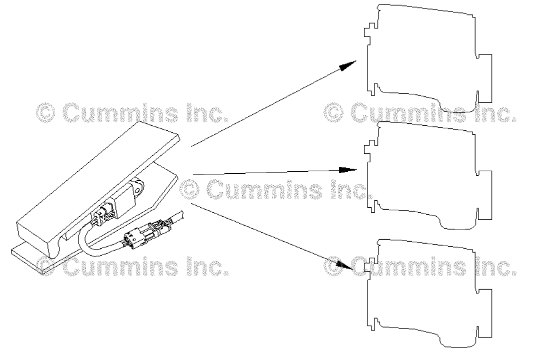

19801084

All soft-coupled marine configuration engines are connected to a J1939 datalink.

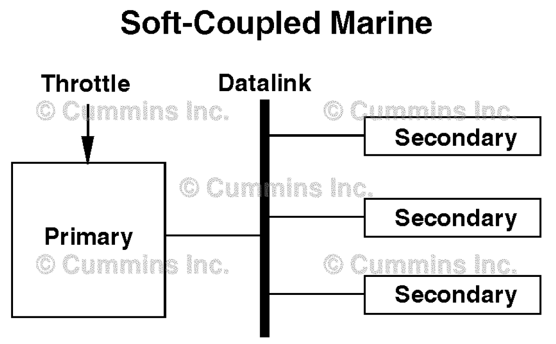

19400714

Pulse-Width Modulate Output

This feature allows the engine control module to output an analog signal that is proportional to either engine speed, engine load, engine torque output, or throttle input.

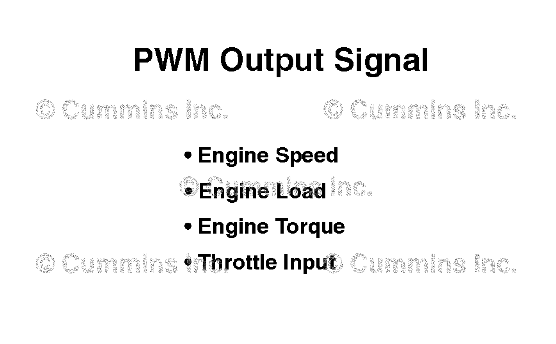

19d00581

Downloaded from www.Manualslib.com manuals search engine

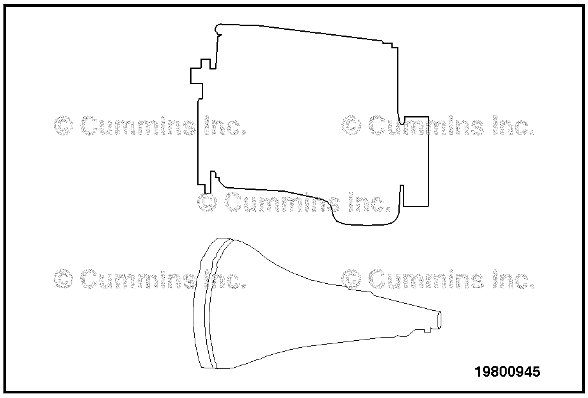

The pulse-width modulate output signal is intended to be used to control an engine or transmission that relies on an analog signal input. This signal can also be configured as an on/off signal where the signal is either 12 VDC (v battery) or open, depending on the load.

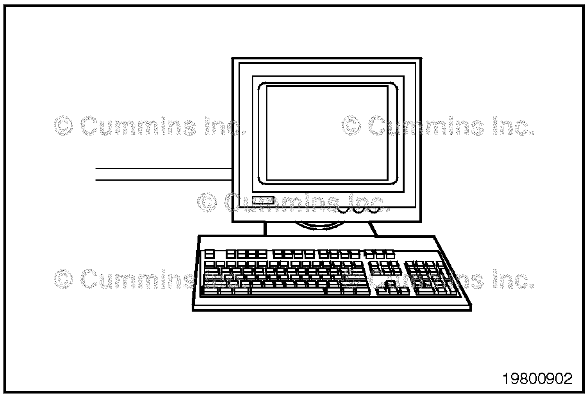

The pulse-width modulate output feature can be adjusted using the INSITE™ electronic service tool if the feature is adjustable in the calibration.

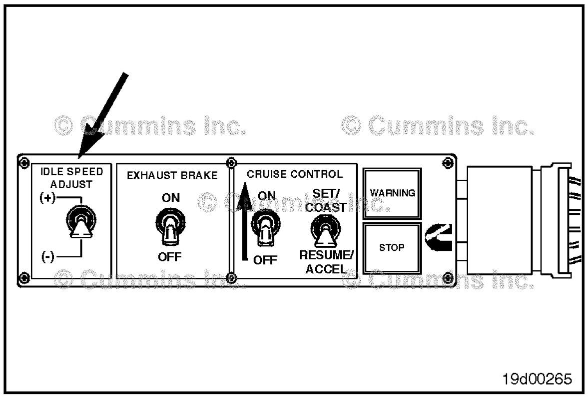

Low-Idle Speed

This parameter is the engine speed at which the engine will idle. This speed can be adjusted by a cab switch if the switch is installed and the low-idle adjustment feature is enabled.

Low-idle speed can be adjusted using the INSITE™ service tool.

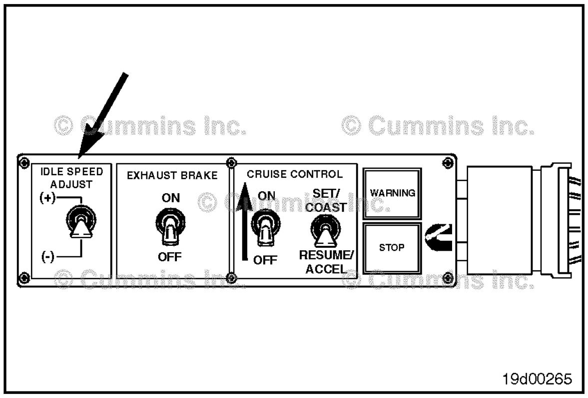

Low-Idle Adjustment

This feature allows the idle speed range to be increased or decreased in 25-rpm standard increments with the in-cab increment or decrement switch. Depending on the calibration, the rpm increment could **not** be 25-rpm. There are limits on how high or low the low-idle speed can be adjusted. The allowable adjustment range for a QSC8.3 engine is 600 to 1200 rpm.

Downloaded from www.Manualslib.com manuals search engine

Alternate Low-Idle Speed Control

This feature allows the operator to switch between the low idle speed setting (3) and an alternate low-idle speed setting (4) (the axis 1 is engine speed and 2 is engine torque).

NOTE: On QSC8.3 engines during cold start-ups, and with engine temperatures less than 21°C [70°F], pilot injection has priority over alternate low-idle speed until the engine is properly warmed up.

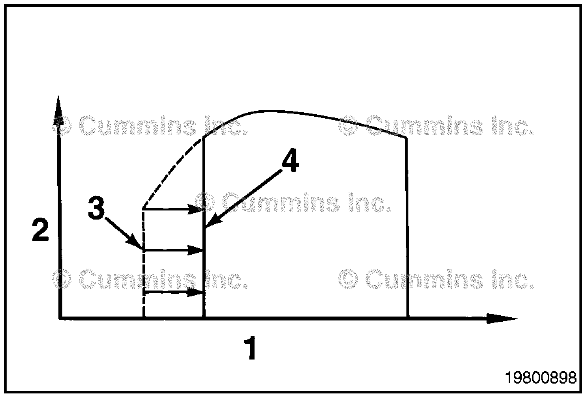

19800898

Depending on original equipment manufacturer (OEM) availability the alternate low-idle speed control feature provides the ability to select an alternate idle speed by an original equipment manufacturer (OEM)-provided switch (1 is in the OFF position, and 2 is in the ON position).

NOTE: The alternate low idle speed can **not** be adjusted by the idle increment/decrement switch.

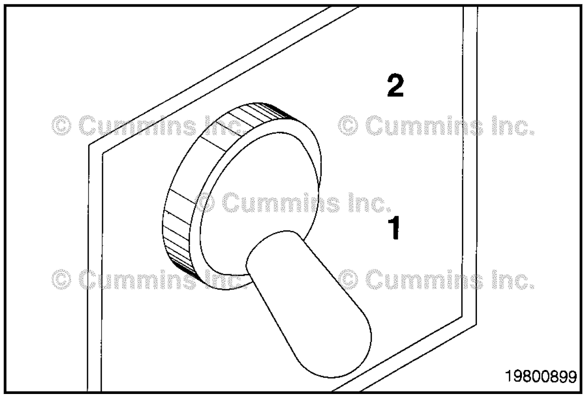

19800899

Idle Shutdown

This feature automatically shuts off an engine after a period of engine idling when there is no activity from the driver such as engine speed changing or having the engine under load.

The idle shutdown system will **not** be active at coolant temperatures below 37.8°C [100°F].

After an engine has been automatically shut off, the key **must** be turned off for 15 to 20 seconds before attempting a restart.

The idle shutdown feature can be enabled or disabled using the INSITE™ service tool.

NOTE: This feature will shut off the engine **only**. It will **not** remove power from other accessories powered by the keyswitch. These can drain the battery.

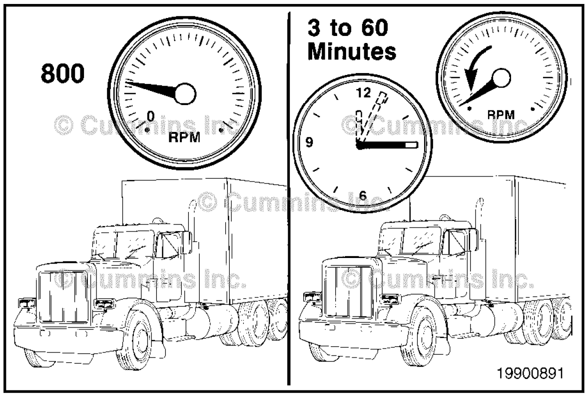

19900891

Downloaded from www.Manualslib.com manuals search engine

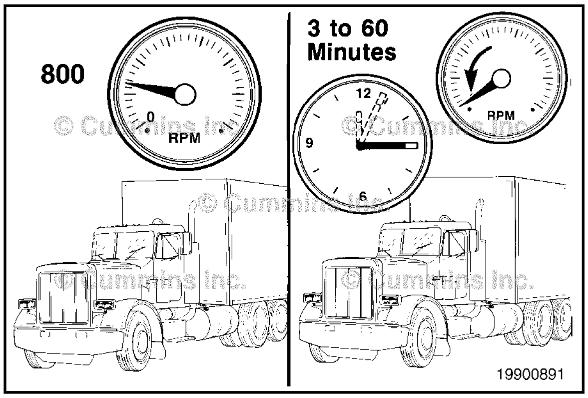

Idle Shutdown Time

This is a period of engine idling time when there is no activity from the driver before the engine automatically shuts off.

The idle shutdown time, if allowed, can be changed using the INSITE™ service tool.

NOTE: This parameter will **not** appear if the idle shutdown feature is turned off.

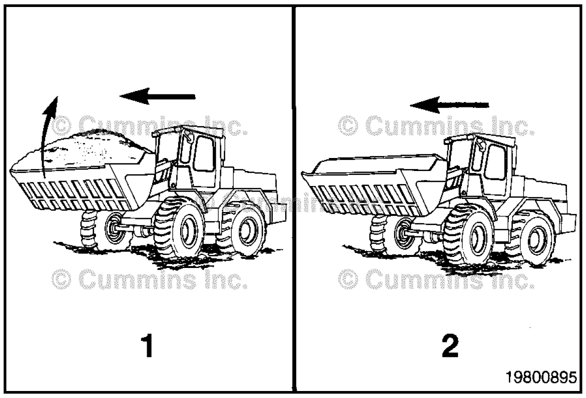

Idle Shutdown Override

This feature allows the driver to override the idle shutdown by changing the engine speed or putting the engine under load (1).

The idle shutdown warning period lasts for a calibrated period of time prior to engine shutdown. The yellow WARNING lamp on the dash will flash during the idle shutdown warning period.

After the idle shutdown feature has been overridden, this feature will **not** shut off the engine again until the vehicle has been moved.

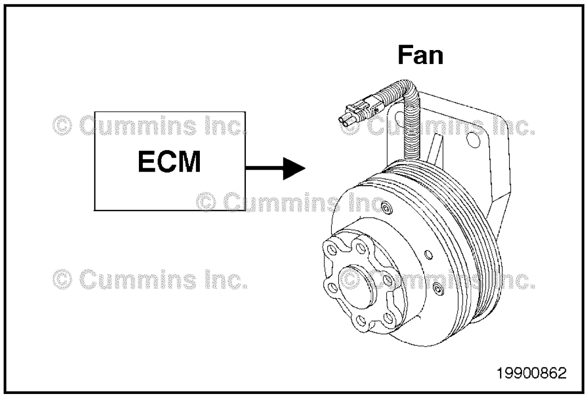

Fan Type

Enable this feature to control a variable speed fan drive to help optimize fuel economy when a variable speed fan is available for use. The engine control module (ECM) varies fan speed according to coolant temperature to maintain the temperature in the optimum operating range while minimizing the amount of load put on the engine by the fan.

The variable speed fan feature can be enabled or disabled using the INSITE™ service tool.

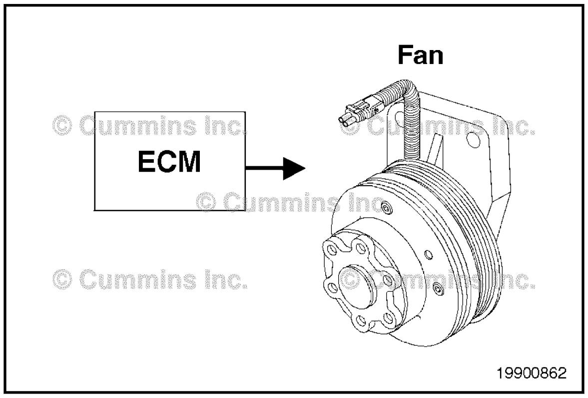

Programmable Fan Logic

Select either 0 VDC equals ON or 12 VDC equals ON to match the fan clutch logic used in the application. It is recommended that a fan relay be used for fans that draw more than six amps.

The programmable fan logic can be adjusted using the INSITE™ service tool.

Downloaded from www.Manualslib.com manuals search engine

Manual Fan Switch Enable

The ECM can control the cooling fan based on inputs from the coolant temperature sensor and the intake manifold temperature sensor.

Some applications will also provide inputs to the engine control module (ECM) for auxiliary device cooling, such as air conditioner pressure and power steering temperature. Your application also can include a manual switch for fan control.

The manual fan switch feature can be enabled or disabled using the INSITE™ service tool.

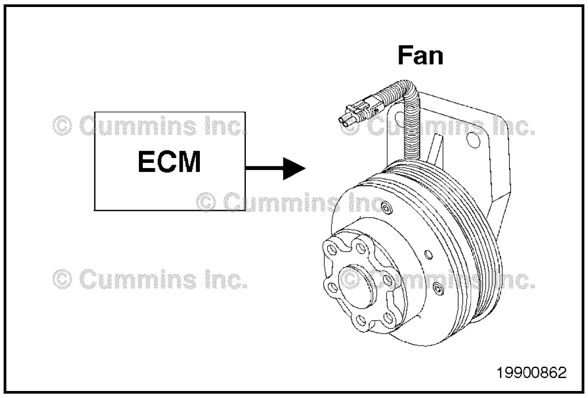

Air Conditioner Pressure Switch Input

Enable this feature if the air conditioner pressure switch input into the ECM is being used to control the fan.

The air conditioner pressure switch input can be enabled by using the INSITE™ service tool.

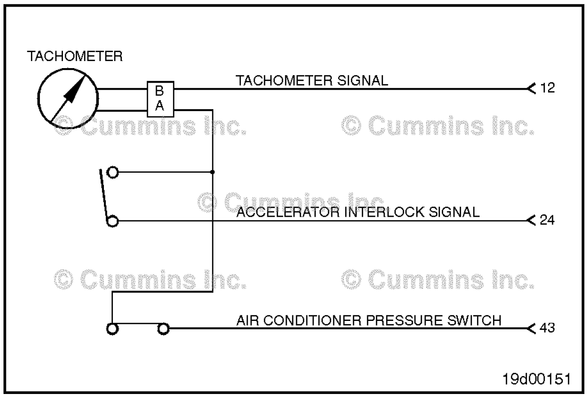

Minimum Fan-on Time with Air Conditioner Pressure Switch

This feature controls the minimum amount of time that the fan will stay on when it is activated by the air conditioner pressure switch to reduce excessive fan cycling.

The minimum fan-on time with air conditioner pressure switch can be adjusted by using the INSITE™ service tool.

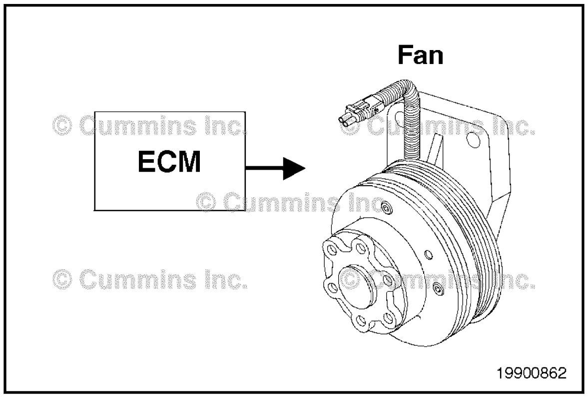

Fan-on with Exhaust Brake

This feature will enable an electric fan when the exhaust brake is engaged. This increases the total braking power by increasing the parasitic load on the engine.

The fan-on with exhaust brake feature can be enabled or disabled using the INSITE™ service tool.

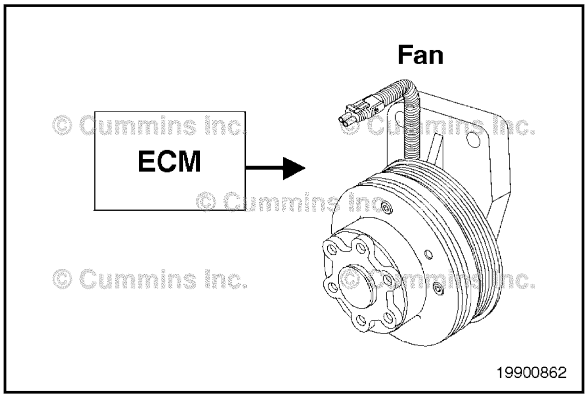

Downloaded from www.Manualslib.com manuals search engine

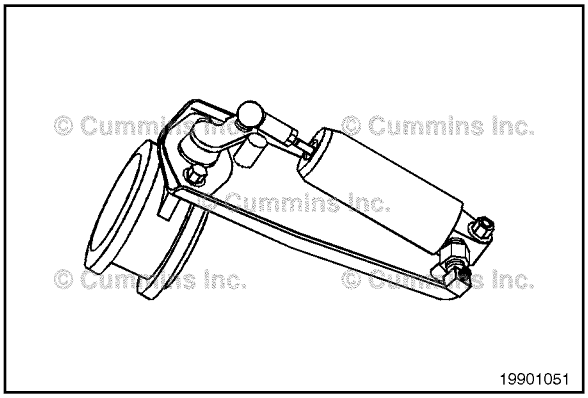

Exhaust Brake

Some vehicles are equipped with an ECM-controlled exhaust brake. This exhaust brake can be used to slow the vehicle. The brake accomplishes this by restricting the exhaust gas flow out of the engine. Using the exhaust brake in hilly terrain or during heavily loaded decelerations can help reduce wear on the service brakes.

The ECM will activate the exhaust brake when conditions require its operation.

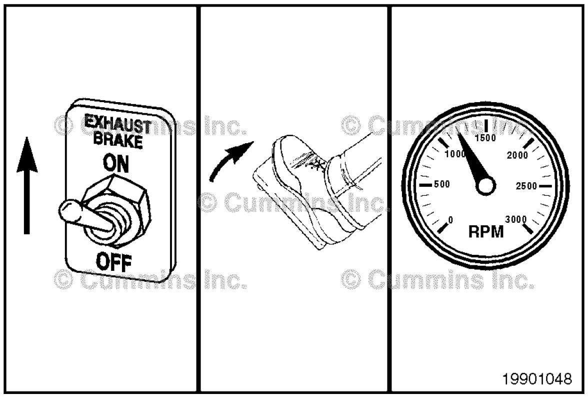

Several operating conditions **must** be true to activate the exhaust brake:

1 The exhaust brake switch **must** be in the ON position.

2 The operator's foot **must** be off the accelerator pedal (pedal at low-idle speed position).

3 The engine speed **must** be above 1000 rpm.

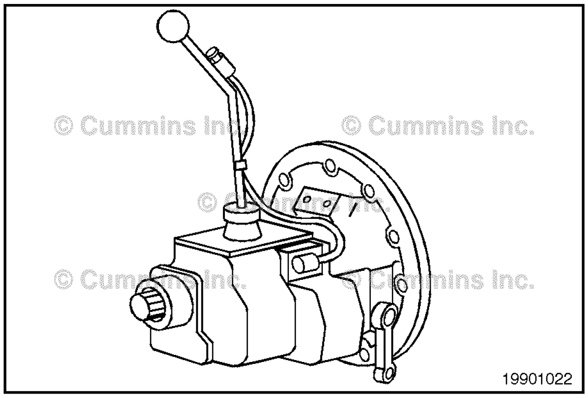

If the above conditions are true, in addition to several ECM internal fueling command checks, then the exhaust brake will engage and begin applying a braking effect to the engine. The exhaust brake will remain on until one of the above conditions is no longer true.

NOTE: Some electronically controlled automatic transmissions will begin downshifting during exhaust brake operation. This keeps the engine speed up near rated speed where the braking effect is greatest.

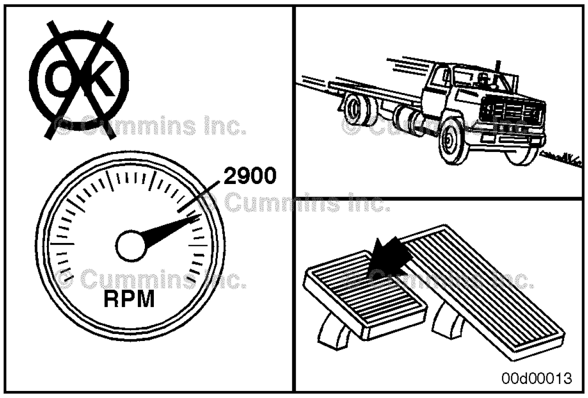

⚠CAUTION⚠

The engine speed must not exceed 2900 rpm under any circumstances. When descending a steep grade, use a combination of transmission gears and engine or service brakes to control the vehicle and engine speed.

Downloaded from www.Manualslib.com manuals search engine

Exhaust Brake or Drivetrain Retarder Control

This feature tells the ECM whether an exhaust brake or a drivetrain retarder is being used on the vehicle. It allows the drivetrain retarder to operate below 1000 rpm down to idle speed, but will disengage at 1000 rpm when the exhaust brake feature is chosen.

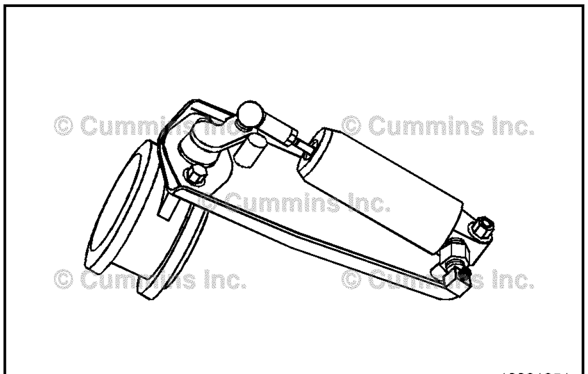

19901051

Engine Warm-up Protection

This feature inhibits the throttle to keep the engine at low idle. This allows oil to reach all critical engine components before engine speed is increased above low idle.

To limit the engine's speed at start-up, the following inputs are limited:

1 Throttle input

2 Intermediate speed control switches

3 Datalink control inputs.

The engine warm-up protection feature can be enabled or disabled using the INSITE™ service tool.

NOTE: The MAINTENANCE lamp is turned on while this feature is operating. Once adequate oil pressure is supplied to the engine, the lamp is turned off.

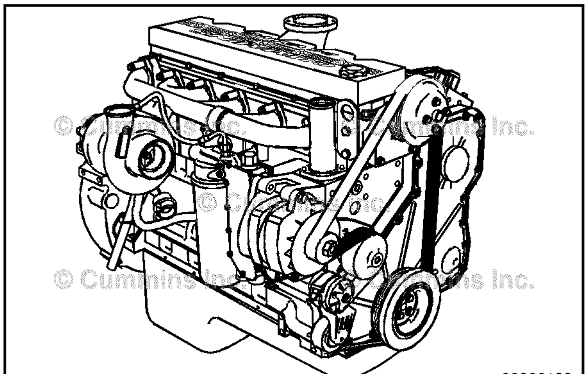

00900123

Hot Shutdown Monitor/Hot Shutdown Load Percent

If the hot shutdown monitor feature is enabled, the engine control module (ECM) will log an inactive fault code when the engine is turned off while still "hot" by the operator or by the engine protection feature.

An engine is considered "hot" when the hot shutdown load percent of the engine is above the threshold set by the INSITE™ service tool. The hot shutdown load percent is based on the duty cycle load factor that is determined from the engine's fueling levels.

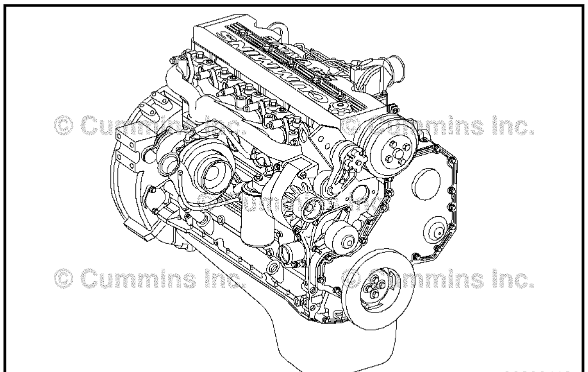

00900113

Downloaded from www.Manualslib.com manuals search engine

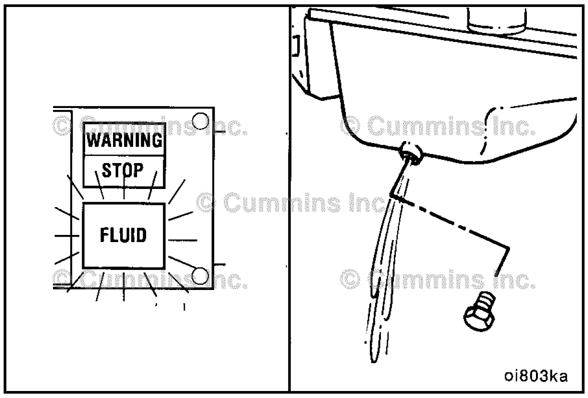

Maintenance Monitor

⚠CAUTION⚠
The maintenance monitor is designed to alert the operator of the need for a routine maintenance stop. Maintenance records must still be maintained for historical purposes.

⚠CAUTION⚠
The maintenance monitor uses data received from the engine control module (ECM) to determine the amount of fuel burned. Whenever a battery voltage fault has occurred, the maintenance monitor data can be inaccurate.

The maintenance monitor is an optional feature that will alert the operator when it is time to change oil and perform any other simultaneous maintenance tasks. The maintenance monitor continuously monitors the time the engine has been operating and the amount of fuel burned, to determine when it is time to change oil.

NOTE: The operator **must** still be alert for any indications that the engine needs other service.

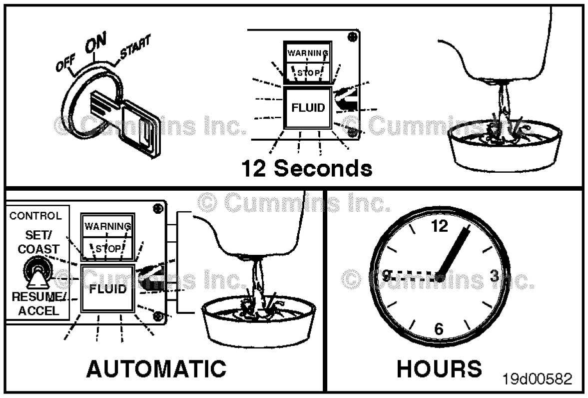

The maintenance monitor has three modes of operation:

- Automatic mode
- Manual mode
- Time mode.

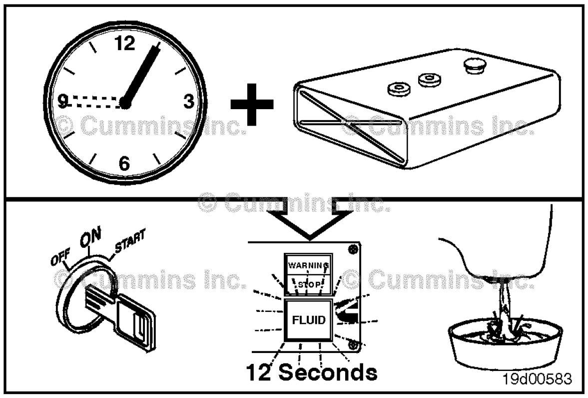

Maintenance Monitor Automatic Mode

⚠CAUTION⚠
The use of synthetic-base oil does not justify extended oil change intervals. Extended oil change intervals will decrease engine life because of factors such as corrosion, deposits, and wear.

The automatic mode alerts the operator when it is time to change oil based on Cummins Inc. recommended interval. It determines the maintenance interval based on coolant temperature and load factor.

When the automatic mode is selected, the severe oil drain interval duty cycle is the default.

Downloaded from www.Manualslib.com manuals search engine

Maintenance Monitor Interval Factor

The interval factor is used **only** in the maintenance monitor automatic mode. It is used to adjust the maintenance interval for severe, normal, or light-duty applications.

The original factory programmed value is SEVERE.

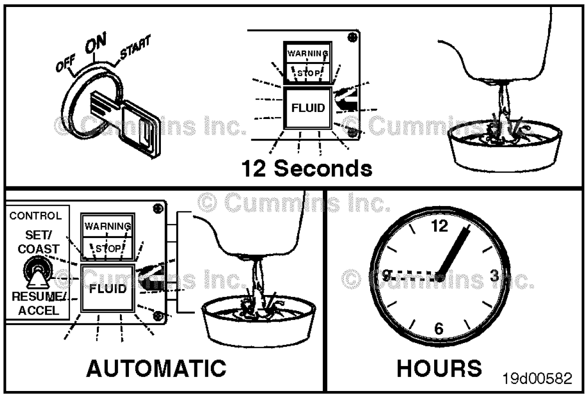

Maintenance Monitor Manual Mode

⚠CAUTION⚠

When selecting the correct oil-change interval for your application, Cummins Inc. does not recommend exceeding published intervals and is not responsible for damage sustained from overextended drain intervals.

Refer to Procedure 102-002 in Section 2.

The time mode allows the customer to enter a desired time interval. The maintenance monitor will then monitor the time the engine has run and alert the operator when the interval has ended.

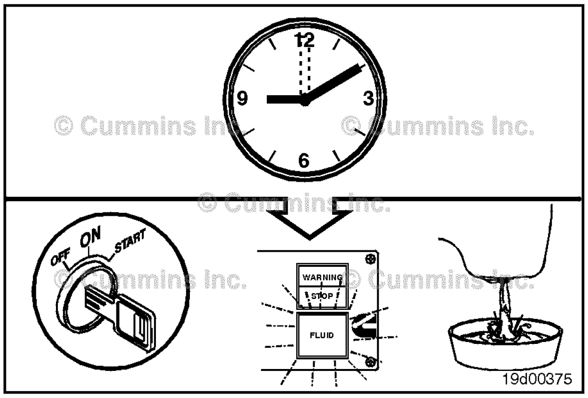

Maintenance Monitor Interval Alert Percentage

This feature allows the user to enter the percentage of the current interval at which the light comes on, indicating the need for an oil change. The parameter allows the user to obtain an early warning of the need for a maintenance stop.

For example, if the time mode is set to 100 hours, and the interval alert percentage is set to 90 percent, the MAINTENANCE lamp will illuminate at 90 hours (90 percent of 100 hours).

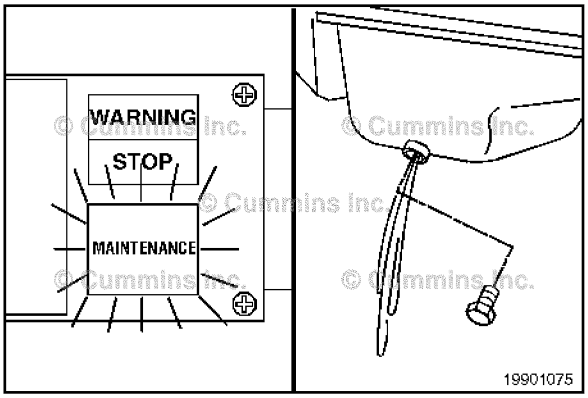

Engine Time Offset

This parameter is part of the trip information system. The value entered here will be added to total ECM time to get total engine time. This parameter allows the time on the engine to be entered when an ECM is replaced.

Engine time offset can be adjusted using the INSITE™ service tool.

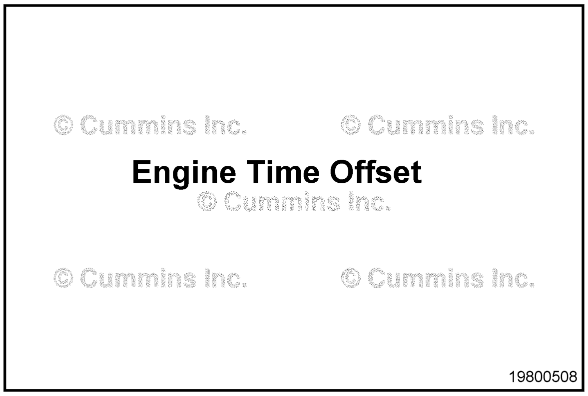

Downloaded from www.Manualslib.com manuals search engine

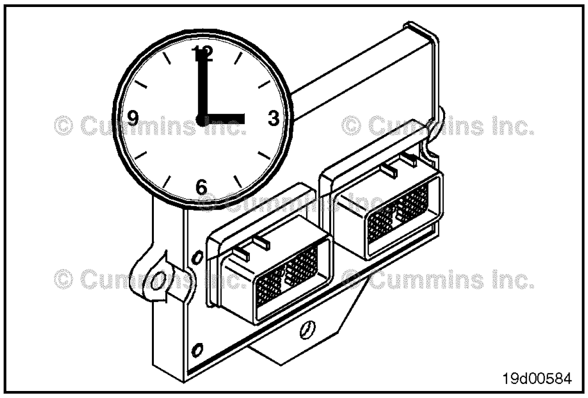

Real-Time Clock

The real-time clock provides time and date for stamping of operational events. The real time clock will maintain time value in units of year, month, day, hour (24-hour base), minute, and second. Loss of clock accuracy will be indicated with a diagnostic fault code. This feature can be set manually or automatically (to the PC time and date) through the INSITE™ service tool.

Adjust Time		
	Standard Setting	**Customer Selection**
Auto Set (set to PC time and date)	No	__ Yes __ No
Manual Date	_____	_____
Date	__/__/__	Adjust Date
Time	__/__/__	

Reduced accuracy will be indicated with the diagnostic Fault Code 319. Upon loss of clock accuracy, the real-time clock will be "initialized" with the last known real time.

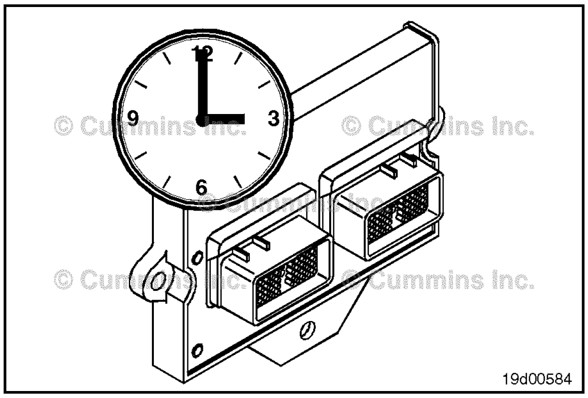

The loss of the real-time clock can occur due to a hardware failure (real-time clock chip fails) or a loss of power. There is no battery backup for the clock. Therefore, if the battery is removed from the system for five seconds, the real-time clock will be lost.

To initialize the real-time clock, use the INSITE™ service tool, the menu item "Adjustments - Feature and Parameters." At this point a screen will pop up in which you can manually enter a new time and date, or you can select "Real-Time Clock Autoset" and the time and date will be set to the PC's time and date. After initializing the real time clock, INSITE™ electronic service tool will set the Fault Code 319 inactive.

NOTE: Once the real-time clock has been enabled, you can **not** disable the feature.

Downloaded from www.Manualslib.com manuals search engine

User-Activated Datalogger

The purpose of this feature is to enable the engine control module (ECM) to log selectable data parameters on request. This snapshot request can be initiated either by an operator-controlled diagnostic switch or automatically based on a set of selectable trigger points. The engine control module (ECM) will store, to nonvolatile memory, a maximum of two snapshot events. Half of the data for each snapshot event will consist of pretrigger data, and the other half will be posttrigger data. The INSITE™ electronic service tool will provide a list of loggable data parameters and trigger points for the user to select. In addition, the INSITE™ electronic service tool will allow the user to select the time interval for data parameter sampling and choose manual or automatic triggers. This feature has the potential to decrease equipment downtime due to improved troubleshooting capabilities as well as providing assistance in troubleshooting intermittent problems. Also, in the diagnostic switch mode, an operator can capture data while a problem is occurring, so service personnel can analyze the data at a later time.

Parameters:

- User-activated datalogger enable
- Trigger No. 1
- Trigger No. 2
- Trigger type
- Fault code trigger
- Fault code trigger when
- Parameter trigger
- Parameter trigger when
- Parameter limit value
- Activation mode
- Sampling rate
- Parameters to log.

Parameters:

- **User-activated datalogger enable**
- **Trigger No. 1**
- **Trigger No. 2**
- **Trigger type**
- **Fault code trigger**
- **Fault code trigger when**
- **Parameter trigger**
- **Parameter trigger when**
- **Parameter limit value**
- **Activation mode**
- **Sampling rate**
- **Parameters to log**

19d00585

© Cummins Inc.

Throttle-Activated Diagnostic Switch

Throttle-activated diagnostic switch is intended to eliminate the need for a dash-mounted diagnostic switch, which is used to activate the diagnostic mode to display active fault codes in a sequence of flashing lamps. The throttle-activated diagnostic switch feature eliminates the need for a dash-mounted diagnostic switch by providing a simple sequence of throttle movements that activate the diagnostic mode.

NOTE: The feature will work with all throttle types.

NOTE: In order to reset the maintenance monitor data, a diagnostic switch **must** be installed.

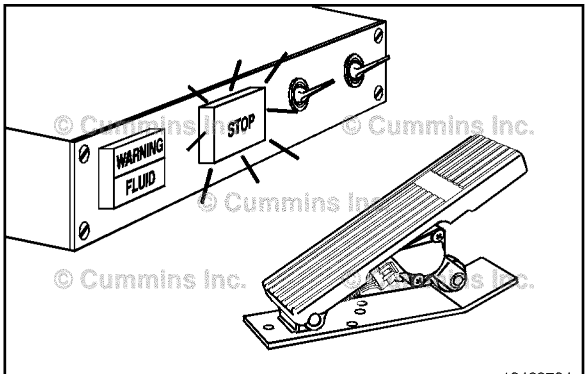

19400734

Downloaded from www.Manualslib.com manuals search engine

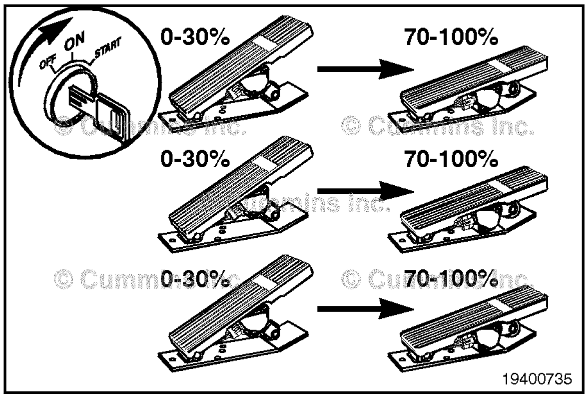

When the engine is **not** running, a sequence of three throttle cycles after the keyswitch is turned on will activate the diagnostic mode. The increment/decrement switch can be used to navigate to the next or previous fault code. In the case that these switches are **not** available, a single throttle cycle will also increment to the next fault code.

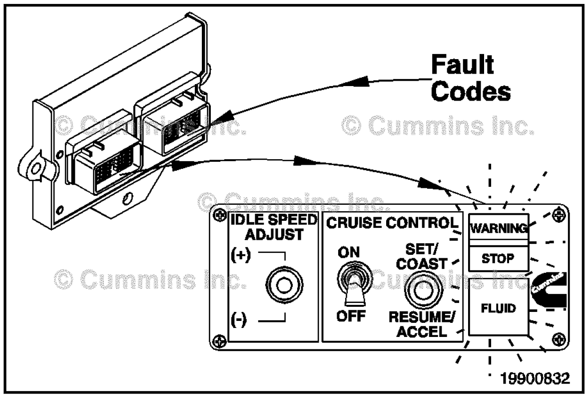

Diagnostic Fault Codes

The QSC8.3 control system can show and record operation anomalies that present themselves as fault codes. These codes will make troubleshooting easier. The fault codes are recorded in the engine control module (ECM). They can be read using the fault lamps in the dash or with the INSITE™ service tool.

NOTE: Not all engines or QSC8.3 control system anomalies are shown as fault codes.

The ISC/QSC/ISL control system can show and record operation anomalies that present themselves as fault codes. These codes will make troubleshooting easier. The fault codes are recorded in the engine control module (ECM). They can be read using the fault lamps in the dash or with the INSITE™ service tool.

NOTE: Not all engine or QSC control system anomalies are shown as fault codes.

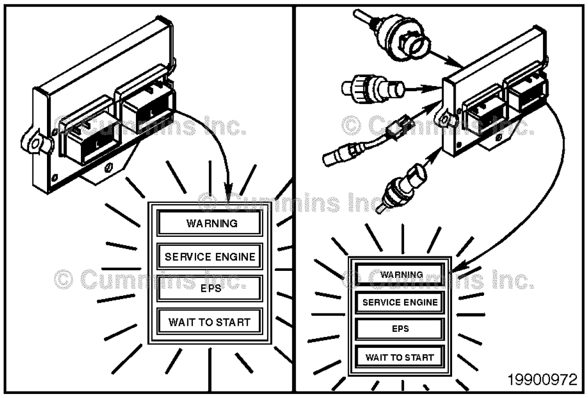

There are three types of system codes:

- Engine electronic control system fault codes
- Engine protection system fault codes
- Engine maintenance indicator codes.

All fault codes recorded will be either active (fault code is currently active on the engine) or inactive (fault code was active at some time, but at the moment is **not** active).

Downloaded from www.Manualslib.com manuals search engine

Most, but **not** all, of the electronic fault codes will light a lamp when they are active. There are three possible lamps that can be illuminated when a fault code is active:

- The WARNING or CHECK ENGINE lamp is yellow and indicates the need to repair the fault at the first available opportunity.
- The STOP or STOP ENGINE lamp is red and indicates the need to stop the engine as soon as it can be safely done. The engine should remain shut down until the fault can be repaired.
- The MAINTENANCE lamp will illuminate when an engine maintenance function needs to be performed.

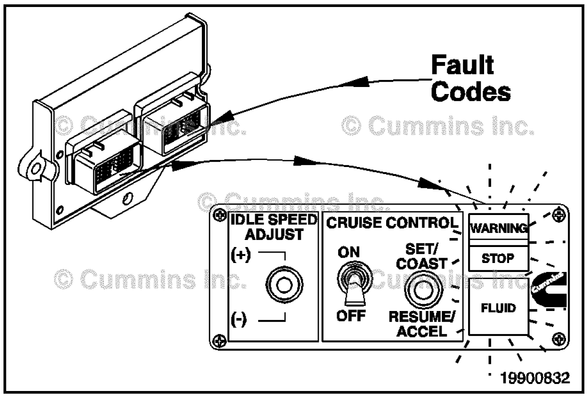

Some vehicles will also have a WAIT TO START lamp and a WATER IN FUEL lamp. The WAIT TO START lamp is illuminated during the preheat time that takes place at key-on during cold-weather starting. To minimize cranking time during cold-weather starting, the engine can **not** be cranked until the WAIT TO START lamp has been extinguished.

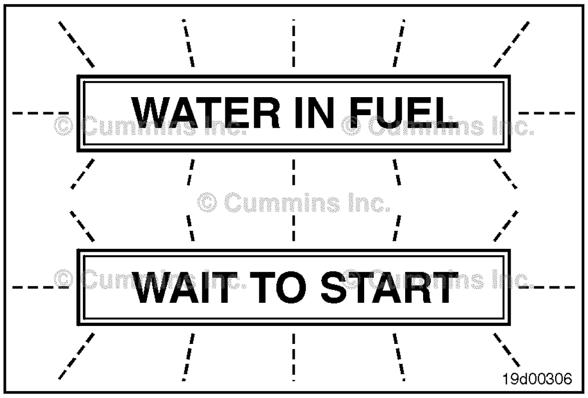

The WATER IN FUEL lamp indicates that the engine's fuel-water separator needs to be drained. This task should be performed, as soon as possible, whenever this lamp is illuminated. Some vehicle OEMs will combine the functions of the MAINTENANCE and WATER IN FUEL lamps. In these cases, the MAINTENANCE lamp indicates a WATER IN FUEL warning, in addition to other maintenance indicators.

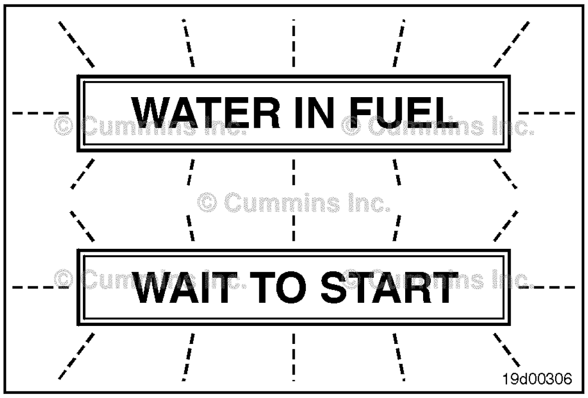

To check for active engine electronic system fault codes and maintenance indicator codes, turn the keyswitch to the OFF position, and move the diagnostic switch to the ON position, or connect the shorting plug into the diagnostic connector.

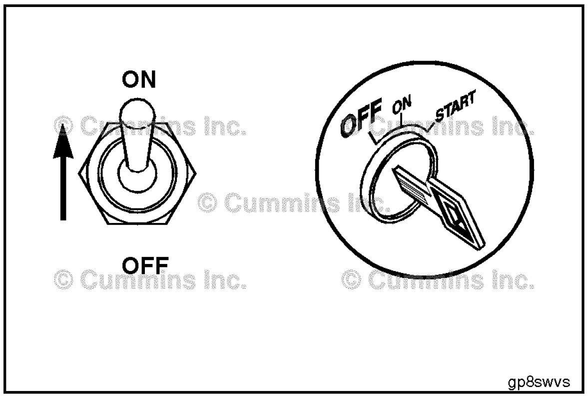

Downloaded from www.Manualslib.com manuals search engine

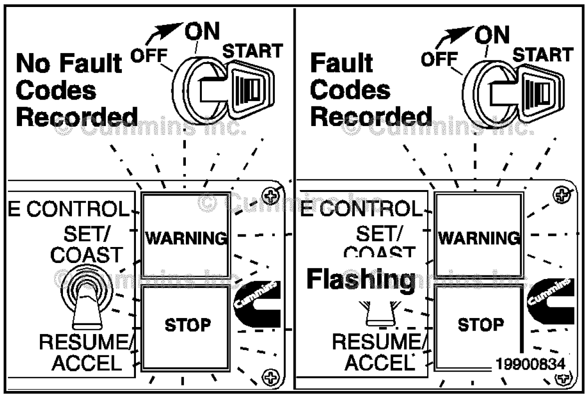

Turn the vehicle keyswitch to the ON position.

If no active fault codes are recorded, both WARNING and STOP lamps will illuminate and stay on.

If active fault codes are recorded, both WARNING and STOP lamps will illuminate momentarily, then begin to flash the codes of the recorded faults.

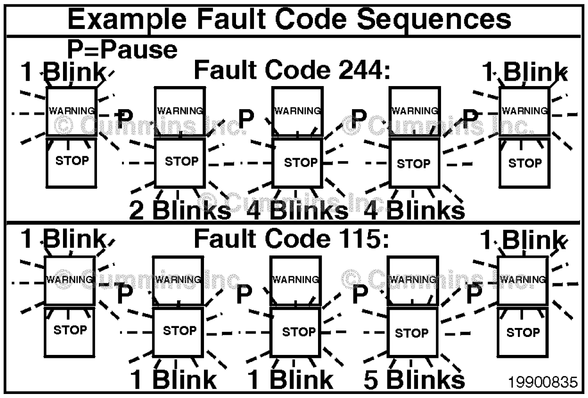

The fault code will flash in the following sequence:

1 A yellow WARNING lamp will flash.

2 There is a short 1- or 2-second pause.

3 The fault code will flash on the red STOP lamp.

4 There is a short 1- or 2-second pause between each number.

When the number has finished flashing in red, a yellow WARNING lamp will appear again. The fault code will repeat the same sequence.

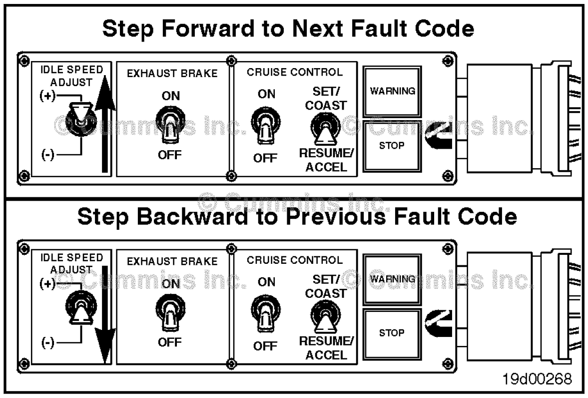

The lights flash each fault code out two times before advancing to the next code. To skip to the next fault code sooner, move the IDLE SPEED ADJUST switch (if equipped) momentarily to the (+) position. You can go back to the previous fault code by momentarily moving the IDLE SPEED ADJUST switch (if equipped) to the (-) position. If **only** one active fault code is recorded, the QSC control system will continuously display the same fault code, even when either (+) or (-) switch is depressed.

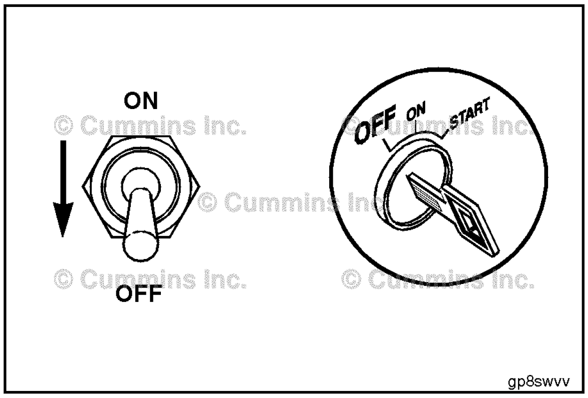

When **not** using the diagnostic system, turn OFF the Diagnostic Switch, or remove the Shorting Plug. If the Diagnostic Switch is left ON or the Shorting Plug left in, the engine control module (ECM) will **not** log some fault codes.

Downloaded from www.Manualslib.com manuals search engine

Fault Code Snapshot Data

This additional fault code information can be obtained by using the INSITE™ service tool. The snapshot data records the value or state of the control system sensors and switches at the time a fault code occurred. Either set of data is stored for the first occurrence of the fault, since it was last cleared, and for the most recent occurrence. This data can be very valuable when trying to recreate or determine engine operating conditions at the time of a fault.

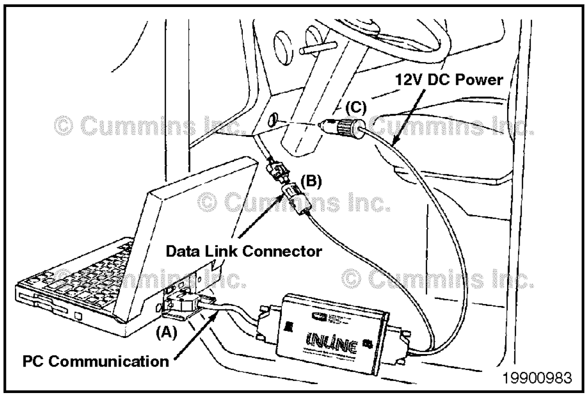

Electromagnetic Interference (EMI)

General Information

Some applications utilize accessories such as (CB radios, mobile transmitters, etc.) if not installed and used correctly the radio frequency energy generated by these accessories can cause electromagnetic interference (EMI) conditions to exist between the accessory and the Cummins electronically controlled systems. Cummins is **not** liable for any performance problems with either the electronically controlled systems or the accessory due to EMI. EMI is **not** considered by Cummins to be a system failure and therefore is **not** warrantable.

System EMI Susceptibility

Your Cummins product has been designed and tested for minimum sensitivity to incoming electromagnetic energy. Testing has shown that there is no performance degradation at relatively high energy levels; however, if very high energy levels are encountered, then some noncritical diagnostic fault code logging can occur. The electronically controlled systems EMI susceptibility level will protect your systems from most, if **not** all, electromagnetic energy-emitting devices that meet the legal requirements.

System EMI Radiation Levels

Your Cummins product has been designed to emit minimum electromagnetic energy. Electronic components are required to pass various Cummins and industry EMI specifications. Testing has shown that when the systems are properly installed, they will not interfere with onboard communication equipment or with the vehicle's, equipment's, or vessel's ability to meet any applicable EMI standards and regulated specifications.

If an interference condition is observed, follow the suggestions below to reduce the amount of interference:

1 Locate the transmitting antenna as far away from the electronically controlled systems and as high as possible.

2 Locate the transmitting antenna as far away as possible from all metal obstructions (e.g., exhaust stacks)

3 Consult a representative of the accessory supplier in your area to:

- Accurately calibrate the device for proper frequency, power output, and sensitivity (both base and remote site devices **must** be properly calibrated)
- Obtain antenna reflective energy data measurements to determine the optimum antenna location
- Obtain optimum antenna type and mounting arrangement for your application
- Make sure your accessory equipment model is built for maximum filtering to reject incoming electromagnetic noise.

Downloaded from www.Manualslib.com manuals search engine

Notes

Downloaded from www.Manualslib.com manuals search engine

Section 2 - Maintenance Guidelines

Section Contents

Page
Maintenance Guidelines - Overview 2-1
General Information....................2-1
Maintenance Record Form 2-5
Maintenance Data....................2-5
Maintenance Schedule 2-3
General Information....................2-3
Oil Drain Intervals....................2-4
Tool Requirements 2-2
General Information....................2-2

Downloaded from www.Manualslib.com manuals search engine

This Page Left Intentionally Blank

Downloaded from www.Manualslib.com manuals search engine

Maintenance Guidelines - Overview

General Information

Cummins Inc. recommends that the system be maintained according to the Maintenance Schedule in this section.

If the system is operating in ambient temperatures below -18°C [0°F] or above 38°C [100°F], perform maintenance at shorter intervals. Shorter maintenance intervals are also required if the system is operated in a dusty environment or if frequent stops are made. For gas fueled generator sets, shorter maintenance intervals are also required, if operating at loads below 70% for prolonged periods. Contact your local Cummins® Authorized Repair Location for recommended maintenance intervals.

Some of these maintenance procedures require special tools or must be completed by qualified personnel. Contact your local Cummins® Authorized Repair Location for detailed information.

If your system is equipped with a component or accessory not manufactured or supplied by Cummins Inc., refer to the component manufacturer's maintenance recommendations.

OEM supplied equipment and components can impact on the performance and reliability of the engine if they are not correctly maintained.

Use the chart provided in this section as a convenient way to record maintenance performed.

Downloaded from www.Manualslib.com manuals search engine

Tool Requirements

General Information

Most of the maintenance operations described in this manual can be performed with common hand tools (metric and S.A.E. wrenches, sockets, and screwdrivers).

The following is a list of special service tools required for some maintenance operations:

Tool Part Number	Description
ST-1273	Pressure gauge
3375045	Torque wrench (0 to 175 ft-lb)
3375049	Oil filter wrench
3376807	Engine coolant and fuel filter wrench
3822524	Belt tension gauge, click type (v-belts and v-ribbed with 4 or 5 ribs)
3822525	Belt tension gauge, click type (v-ribbed with 6 to 12 ribs)
3824556	Charge air cooler (CAC) pressure kit
3824591	Engine barring gear
3824783	Torque wrench (0 to 300 in-lb)
CC-2800	Refractometer
CC-2802	Coolant test kit
3824842	M10 Compuchek® fitting

Contact at Cummins Authorized Repair Location for the required service tools.

A computer is required to run the OEM software. Contact a Cummins Authorized Repair Location for information on hardware requirements.

Downloaded from www.Manualslib.com manuals search engine

Maintenance Schedule

General Information

Perform maintenance at whichever interval occurs first. At each scheduled maintenance interval, perform all previous maintenance checks that are due for scheduled maintenance.

Maintenance Procedures at Daily Interval ....Section 3

- Air Intake Piping - Check
- Cooling Fan - Check
- Crankcase Breather Tube - Check
- Air Tanks and Reservoirs - Check
- Engine Coolant Level - Check
- Fuel-Water Separator - Drain
- Engine Lubricating Oil Level - Check

Maintenance Procedures at 250 Hours or 3 Month ....Section 4

- Air Cleaner Restriction - Check
- Charge-Air Piping - Check
- Charge-Air Cooler - Check
- Fuel Injection Pump Mounting - Check
- Air Compressor Mounting - Check

Maintenance Procedures at 500 Hours or 6 Months ....Section 5

- Fuel Filters (Cummins® and OEM supplied) - Change
- Cooling System - Check
- Coolant Filter - Change
- Lubricating Oil Filter and Oil - Change[1]
- Batteries - Check
- Battery Cables and Connections - Check
- Radiator Pressure Cap - Check

Maintenance Procedures at 1000 Hours or 1 Year ....Section 6

- Drive Belts - Check
- Fan Hub Belt Driven - Check
- Cooling Fan Belt Tensioner - Check

Maintenance Procedures at 2000 Hours or 2 Years ....Section 7

- Cooling System - Flush[2]
- Vibration Damper, Rubber - Check
- Vibration Damper, Viscous - Check
- Engine Steam Cleaning - Clean
- Air Compressor Discharge Lines - Clean
- Engine Mounts - Check

Maintenance Procedures at 5000 Hours or 4 Years ....Section 8

- Overhead Set - Adjust

1 The lubricating oil and lubricating oil filter interval is determined by the sulfur content of the fuel and lubricating oil type used. See the Oil Drain Intervals in this section.

2 This cooling system requirement to Flush at this scheduled maintenance includes: Drain, Flush, and Fill.

Downloaded from www.Manualslib.com manuals search engine

Oil Drain Intervals

See Table 1 to determine the maximum recommended oil change and filter change intervals in kilometers, miles, hours, or months, whichever comes first.

Table 1

American Petroleum Institute (API) Classification	International Classification (ACEA and JAMA)	Fuel Sulfur Content	Oil Change Interval		
			Kilometers [Miles]	Hours	Months
CJ-4 (CES 20081)	ACEA E9	< 500 ppm	14,500 [9000]	500	6
	JAMA DH-2	500 - 5000 ppm	11,600 [7200]*	400*	6
CI-4 (CES 20078)	ACEA E7	up to 5000 ppm	14,500 [9000]	500	6
API CH-4/SJ (CES 20071, 20076, or 20077)	ACEA E5	up to 5000 ppm	14,500 [9000]	500	6
API CF-4/SG (CES 20075)	ACEA E3 ACEA E2 JAMA DH-1	up to 5000 ppm	7250 [4500]	250	6
API CD API CE API CG-4/SH	ACEA E1	up to 5000 ppm	**Obsolete, Do Not Use**		

* The oil drain interval **must** be reduced by 20 percent if American Petroleum Institute (API) CJ-4 (Cummins Inc. Engineering Standard 20081) lubricating oil is used with diesel fuel containing 0.05 to 0.5 mass percent (500 to 5000 ppm) sulfur content.

Downloaded from www.Manualslib.com manuals search engine

Maintenance Record Form

Maintenance Data

Maintenance Record	
Engine Serial No.:	Engine Model:
Owner's Name:	Equipment Name/Number:

Key to table headings:
A = Date
B = km [Miles], Hours or Time Interval
C = Actual km [Miles] or Hours
D = Maintenance Check Performed
E = Check Performed By
F = Comments

A	B	C	D	E	F

Downloaded from www.Manualslib.com manuals search engine

Notes

Downloaded from www.Manualslib.com manuals search engine

Section 3 - Maintenance Procedures at Daily Interval

Section Contents

Page
Air Intake Piping ...3-2
Maintenance Check...3-2
Air Tanks and Reservoirs ...3-4
Drain...3-4
Coolant Level ...3-4
Maintenance Check...3-4
Crankcase Breather Tube ...3-3
Maintenance Check...3-3
Daily Maintenance Procedures - Overview ...3-1
General Information...3-1
System Operation Report...3-1
Unusual System Noise...3-1
Fan, Cooling ...3-2
Inspect for Reuse...3-2
Fuel-Water Separator ...3-5
Drain...3-5
Canister Type...3-5
Spin-on Type...3-5
Lubricating Oil Level ...3-6
Maintenance Check...3-6

Downloaded from www.Manualslib.com manuals search engine

This Page Left Intentionally Blank

Downloaded from www.Manualslib.com manuals search engine

Daily Maintenance Procedures - Overview

General Information

Preventative maintenance begins with day-to-day awareness of the system. Before starting the system, check the appropriate fluid levels. Look for:

- Leaks
- Loose or damaged parts
- Worn or damaged belts
- Worn or damage low and high voltage harnesses
- Any change in system appearance.
- Odor of fuel
- Odor of electronic devices

System Operation Report

The system **must** be maintained in top mechanical and electronic condition if the operator is to get optimum satisfaction from its use. The maintenance department needs daily running reports from the operator to make necessary adjustments in the time allocated. The daily running report also helps to make provisions for more extensive maintenance work as the reports indicate the necessity.

Comparison and intelligent interpretation of the daily report, along with a practical follow-up action, will eliminate most failures and emergency repairs.

Report to the maintenance department any of the following conditions that may apply:

- Low lubricating oil pressure
- Low power
- Power increases or engine surge
- Erratic or no accelerator control or response
- Any warning lights flashing or staying on
- Abnormal water or oil temperature
- Unusual system noise
- Excessive smoke
- Excessive use of coolant, fuel, or lubricating oil
- Any fuel, coolant, or lubricating oil leaks
- Loose or damaged parts
- Worn or damaged belts
- Worn or damaged low or high voltage harnesses

Unusual System Noise

During daily maintenance checks, listen for any unusual system noise(s) that can indicate that service is required.

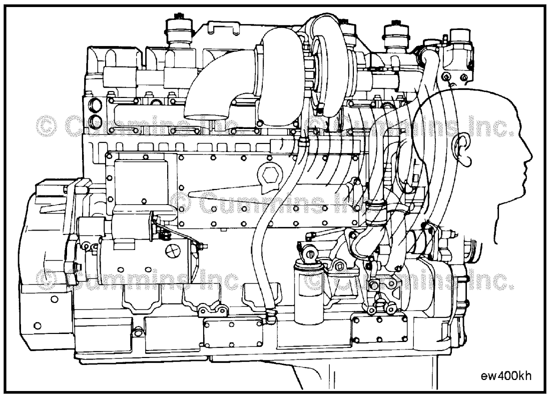

Downloaded from www.Manualslib.com manuals search engine

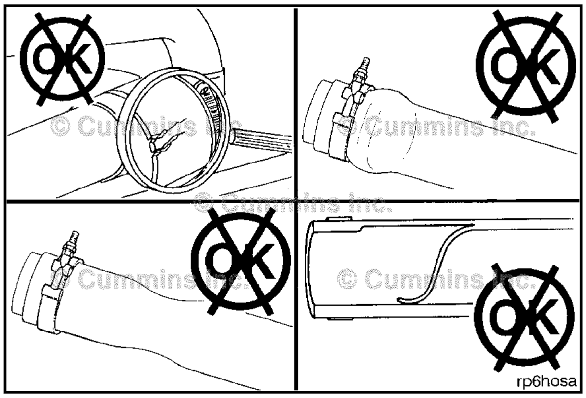

Air Intake Piping

Maintenance Check

Inspect the intake piping daily for wear points and damage to piping, loose clamps, and punctures that can damage the engine.

Replace damaged pipes and tighten loose clamps, as necessary, to prevent the air system from leaking.

Torque Value: 8 N•m [71 in-lb]

Check for corrosion under the clamps and hoses of the intake system piping. Corrosion can allow corrosive products and dirt to enter the intake system. Disassemble and clean, as required.

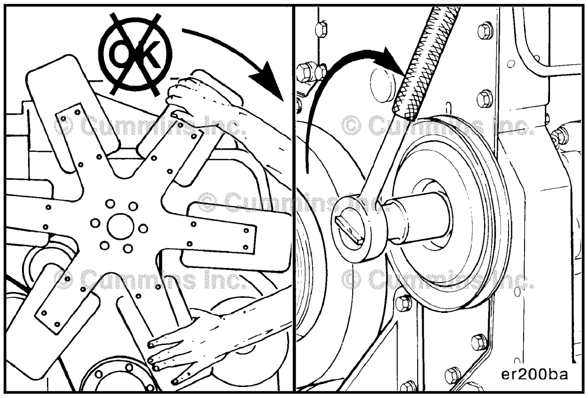

Fan, Cooling

Inspect for Reuse

WARNING

Do not rotate the engine by pulling or prying on the fan. The fan blade(s) can be damaged and cause the fan to fail and cause personal injury or property damage. Use the accessory drive shaft or the crankshaft barring tool to rotate the crankshaft.

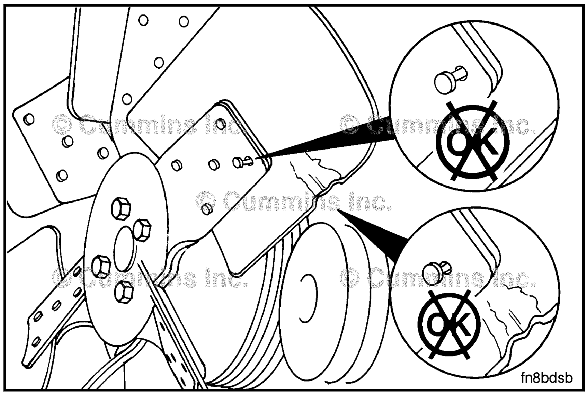

A visual inspection of the cooling fan is required daily. Check for cracks, loose rivets, and bent or loose blades. Check the fan to make sure it is securely mounted. Tighten the capscrews, if necessary.

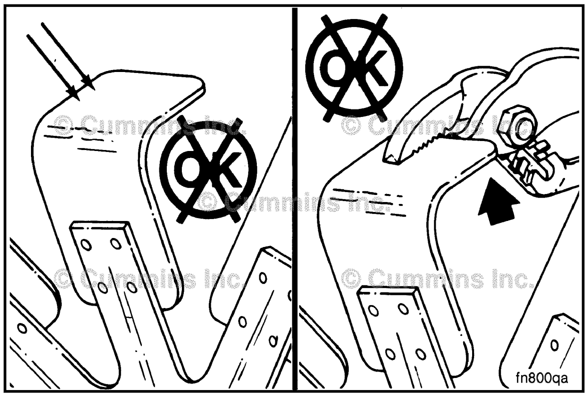

WARNING

Do not straighten a bent fan blade or continue to use a damaged fan. A bent or damaged fan blade can fail during operation and cause personal injury or property damage.

Downloaded from www.Manualslib.com manuals search engine

Replace original equipment fan that is damaged with a fan of the identical part number. Cummins Inc. **must** approve any other fan changes to be covered under warranty.

Refer to the vehicle or equipment manufacturer's specifications for capscrew torque.

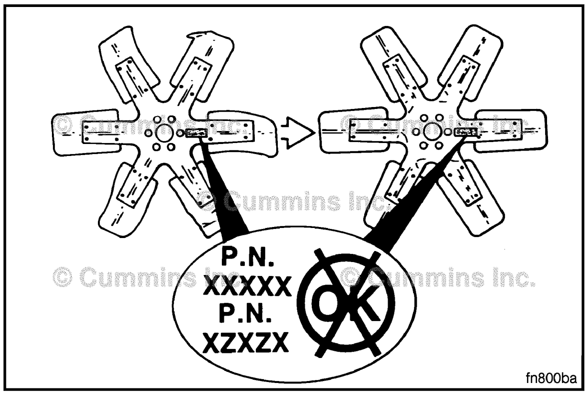

Crankcase Breather Tube

Maintenance Check

Inspect the breather tube for sludge, debris, or ice in the tube.

Inspect the tube more frequently in icy conditions.

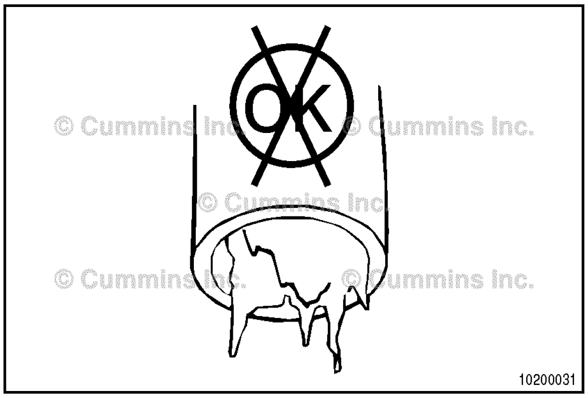

If sludge, debris, or ice is found clean the tube with detergent and warm water or a solvent. Dry the tube with compressed air.

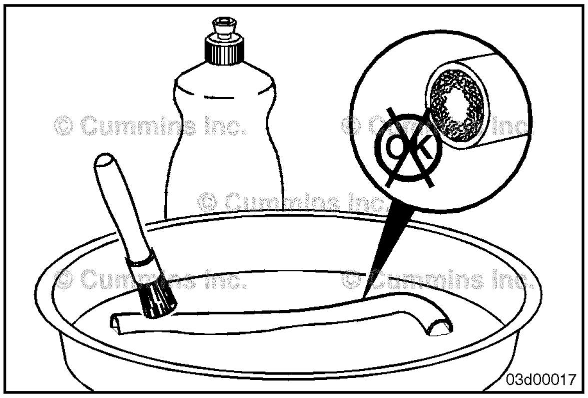

Visually inspect the tube for cracks or damage. If damage is found, replace the crankcase breather tube. Contact your Cummins Authorized Repair Location.

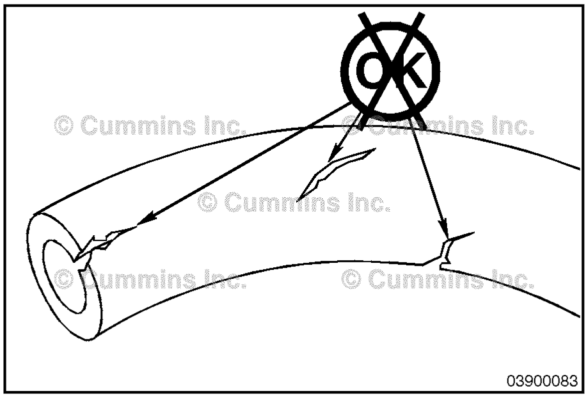

Downloaded from www.Manualslib.com manuals search engine

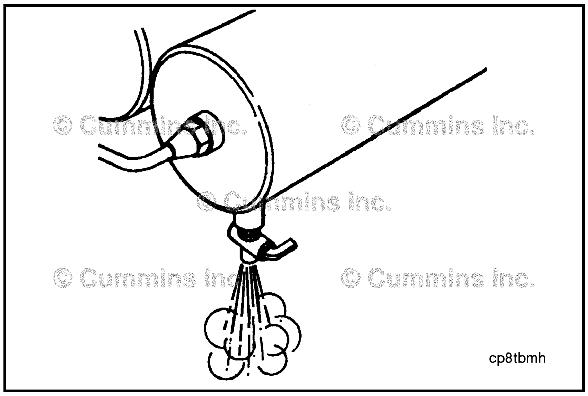

Air Tanks and Reservoirs

Drain

If automatic purging or spitter valves are used, confirm the valves are operating correctly. If a manual drain valve is used on the wet tank, open the draincock on the wet tank to drain any moisture accumulated in the air system. If oil is present, the air compressor system **must** be checked. Contact your Cummins Authorized Repair Location.

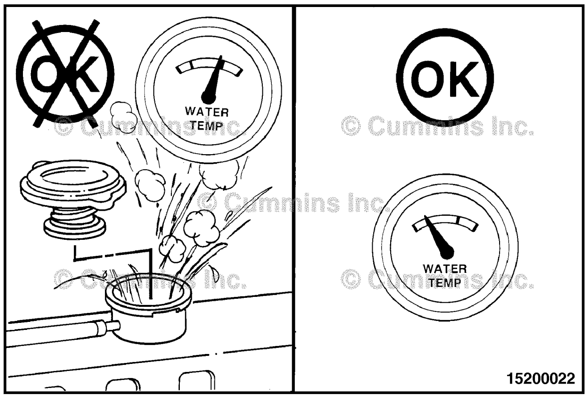

Coolant Level

Maintenance Check

WARNING

Do not remove a pressure cap from a hot engine. Wait until the coolant temperature is below 50°C [120°F] before removing the pressure cap. Heated coolant spray or steam can cause personal injury.

CAUTION

Never use a sealing additive to stop leaks in the cooling system. This can result in cooling system plugging and inadequate coolant flow, causing the engine to overheat.

The coolant level **must** be checked daily.

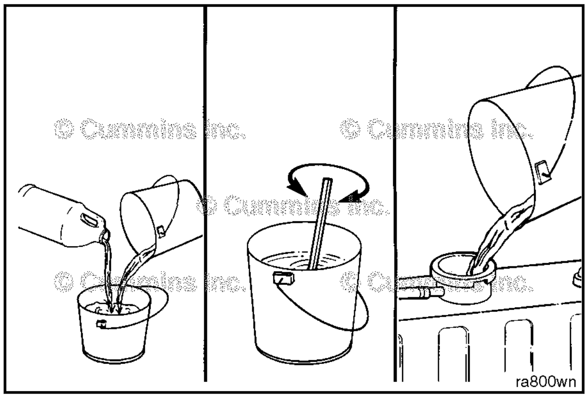

CAUTION

Do not add cold coolant to a hot engine. Engine castings can be damaged. Allow the engine to cool to below 50°C [120°F] before adding coolant.

Coolant added to the engine **must** be mixed with the correct proportions of antifreeze, supplemental coolant additive, and water to avoid engine damage.

Coolant recommendations and specification details on correct mixing of coolant can be found in Maintenance Specifications (Section V).

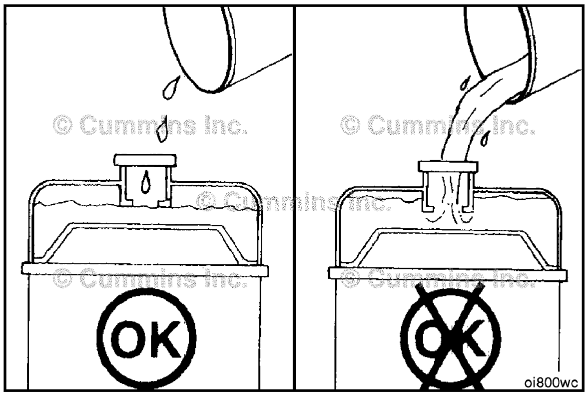

Fill the cooling system with coolant. Refer to the markings on the radiator or expansion tank for coolant levels or refer to the OEM manual.

NOTE: Some radiators have two fill necks, both of which **must** be filled when the cooling system is drained.

Downloaded from www.Manualslib.com manuals search engine

Fuel-Water Separator

Drain

⚠WARNING⚠

Drain the water-fuel separator into a container and dispose of in accordance with local environmental regulations.

Cummins Inc. requires a fuel-water separator or fuel filter be installed in the fuel supply system.

Drain the water and sediment from the separator daily.

Canister Type

Shut off the engine.

Pull up on the drain valve lever until fluid drains out of the drain tube. Drain the filter sump until clear fuel is visible.

Push up on the drain valve until fluid drains out of the drain tube.

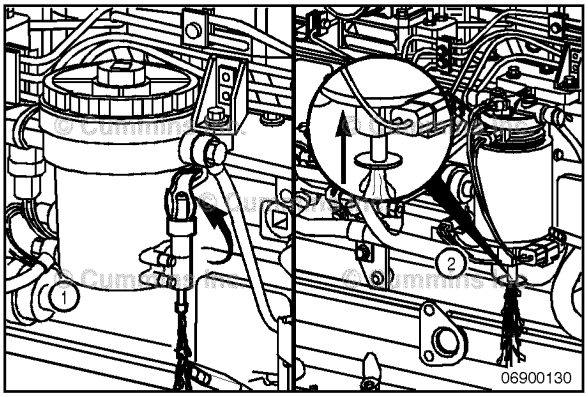

Spin-on Type

Shut off the engine.

Use your hand to open the drain valve. Turn the valve **counterclockwise** approximately 3½ turns until the valve drops down 25.4mm [1 in] and draining occurs.

Drain the filter sump until clear fuel is visible.

⚠CAUTION⚠

When closing the drain valve, do not overtighten the valve. Overtightening can damage the threads.

To close the valve, lift the valve and turn **clockwise** until it is hand-tight.

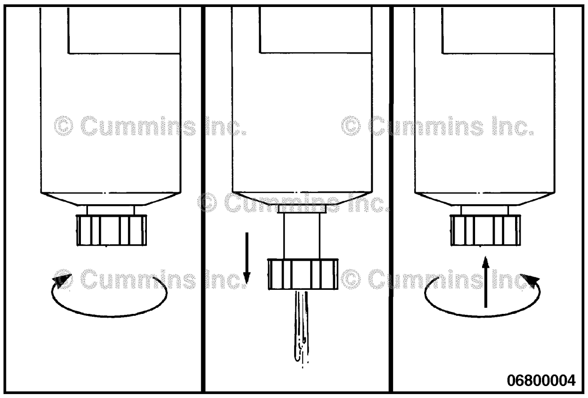

Downloaded from www.Manualslib.com manuals search engine

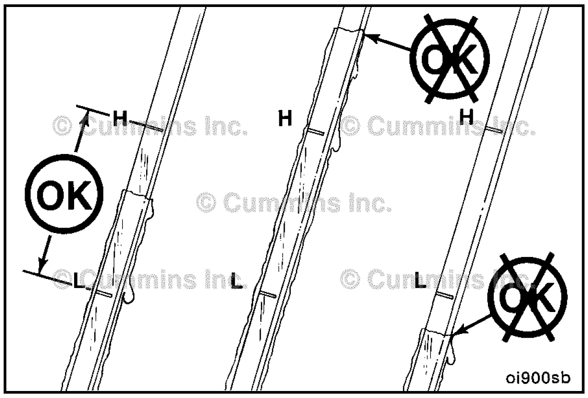

Lubricating Oil Level

Maintenance Check

CAUTION

Never operate the engine with oil level below the L (low) mark or above the H (high) mark. Poor engine performance or engine damage can occur.

The engine **must** be level when checking the oil level to make sure the measurement is correct.

Shut off the engine for an accurate reading.

Wait at least 15 minutes after shutting off the engine to check the oil level. This allows time for the oil to drain into the oil pan.

For additional lubricating oil recommendations and oil pan capacity information, refer to Maintenance Specifications (Section V).

Downloaded from www.Manualslib.com manuals search engine

Section 4 - Maintenance Procedures at 250 Hours or 3 Months

Section Contents

Page

Air Cleaner Restriction 4-1
Maintenance Check....4-1
Air Compressor 4-3
Maintenance Check....4-3
Charge-Air Cooler 4-2
Maintenance Check....4-2
Charge-Air Piping 4-2
Maintenance Check....4-2
Fuel Pump 4-2
General Information....4-2
Maintenance Check....4-3
Maintenance Procedures - Overview 4-1
General Information....4-1

Downloaded from www.Manualslib.com manuals search engine

This Page Left Intentionally Blank

Downloaded from www.Manualslib.com manuals search engine

Maintenance Procedures - Overview

General Information

All maintenance checks and inspections listed in previous maintenance intervals **must** also be performed at this time, in addition to those listed under this maintenance interval.

Air Cleaner Restriction

Maintenance Check

Mechanical Indicator

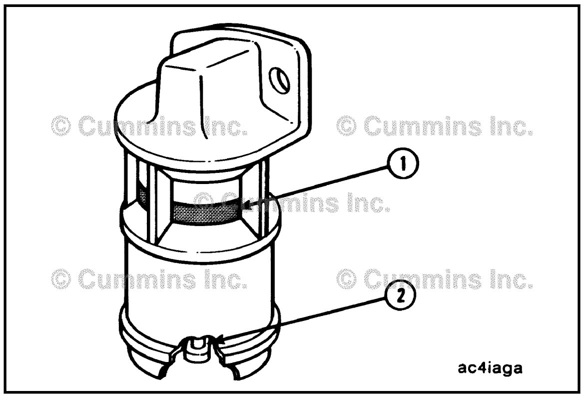

⚠CAUTION⚠

Never operate the engine without an air cleaner. Intake air must be filtered to prevent dirt and debris from entering the engine and causing premature wear.

NOTE: Do **not** remove the felt washer from the indicator. The felt washer absorbs moisture.

A mechanical restriction indicator is available to indicate excessive air restriction through a dry-type air cleaner. This instrument can be mounted in the air cleaner outlet or on the instrument panel. The red flag (1) in the window gradually rises as the cartridge loads with dirt. After changing or replacing the cartridge, reset the indicator by pushing the reset button (2).

Restriction or vacuum indicators need to be installed as close as possible to the turbocharger air inlet in order to obtain a true indication of restrictions.

Vacuum Indicator

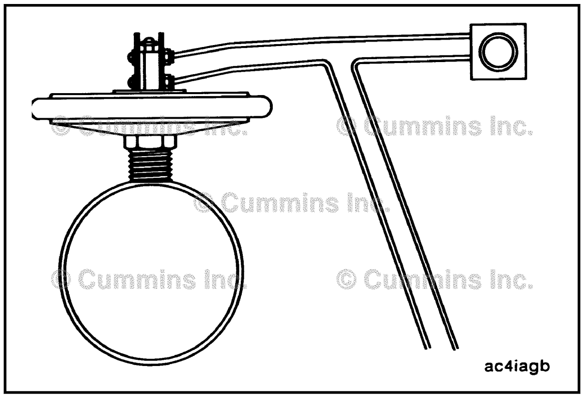

Vacuum switches actuate a warning light on the instrument panel when the air restriction becomes excessive.

Downloaded from www.Manualslib.com manuals search engine

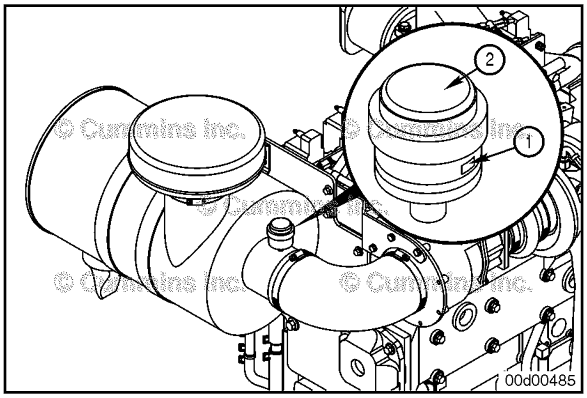

Industrial Gas Mechanical Indicator

A mechanical restriction indicator is available to indicate excessive air restriction through a dry-type air cleaner. This instrument is mounted in the air cleaner outlet. The red flag (1) in the window gradually rises as the cartridge loads with dirt. When air restriction is indicated the air filter **must** be replaced. After changing or replacing the cartridge, reset the indicator by pushing the reset button (2)

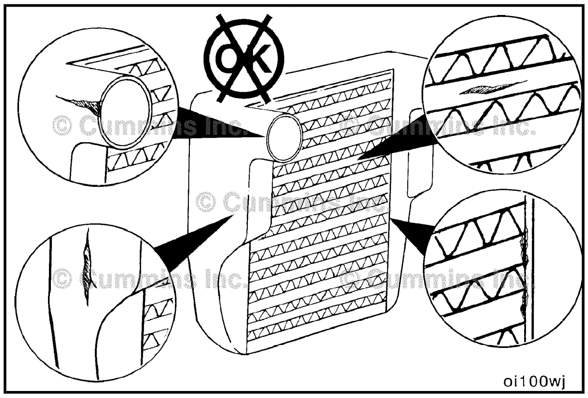

Charge-Air Cooler

Maintenance Check

Inspect the charge-air cooler (CAC) for dirt and debris blocking the fins. Check for cracks, holes, or other damage. If damage is found, refer to the vehicle, vessel, or equipment manufacturer.

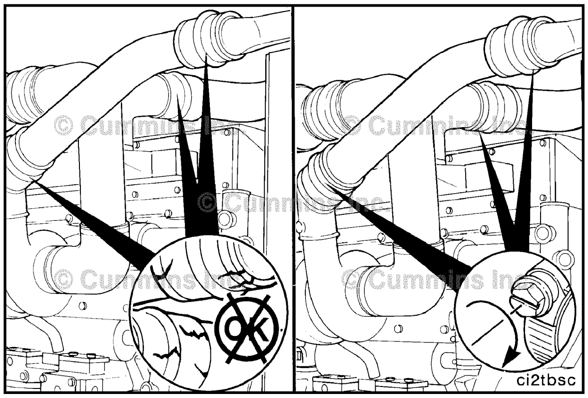

Charge-Air Piping

Maintenance Check

Inspect the charge-air piping and hoses for leaks, holes, cracks, or loose connections. Tighten the hose clamps if necessary. Refer to the vehicle or equipment manufacturer's specifications for the correct torque value.

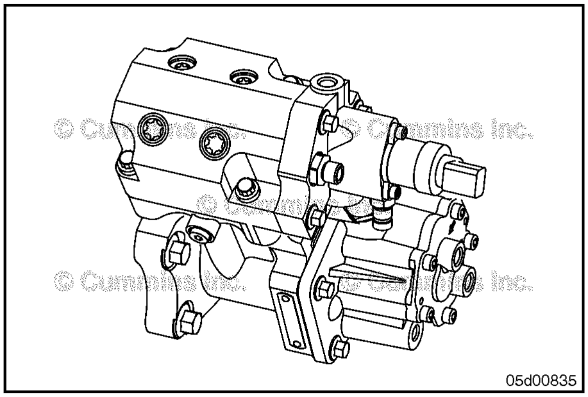

Fuel Pump

General Information

This procedure refers to the Cummins® Common Rail fuel system.

Downloaded from www.Manualslib.com manuals search engine

Maintenance Check

Inspect the fuel injection pump mounting nuts, including the support bracket, for loose or damaged hardware.

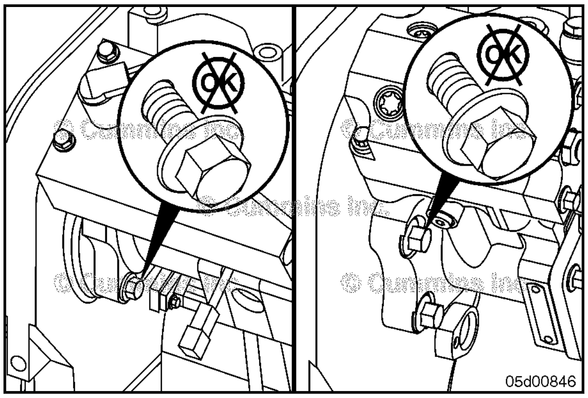

Air Compressor

Maintenance Check

Inspect the air compressor mounting nuts, including the tail support bracket, for loose or damaged hardware.

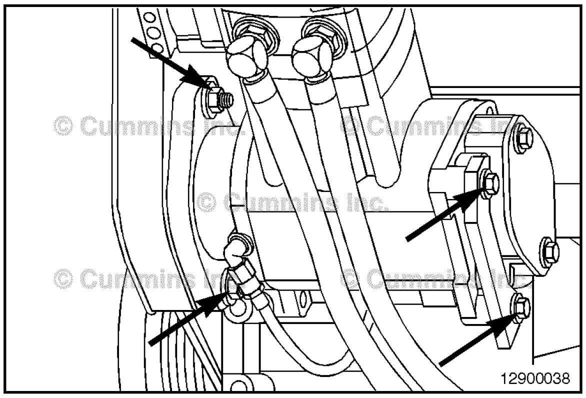

Downloaded from www.Manualslib.com manuals search engine

Notes

Downloaded from www.Manualslib.com manuals search engine

Section 5 - Maintenance Procedures at 500 Hours or 6 Months

Section Contents

Page
Batteries 5-11
Inspect........ 5-11
Battery Cables and Connections 5-12
Initial Check........ 5-12
Coolant Filter 5-8
Install........ 5-9
All Applications Except Marine........ 5-9
Marine Applications........ 5-10
Remove........ 5-8
All Applications Except Marine........ 5-8
Marine Applications........ 5-8
Fuel Filter (Spin-On Type) 5-1
Finishing Steps........ 5-4
General Information........ 5-1
CAPS Fuel System........ 5-1
Cummins Common Rail Fuel System........ 5-1
Install........ 5-2
CAPS Fuel System........ 5-2
Cummins Common Rail Fuel System........ 5-3
Prime........ 5-3
Remove........ 5-2
Lubricating Oil and Filters 5-4
Drain........ 5-4
Fill........ 5-6
Install........ 5-5
Remove........ 5-5
Maintenance Procedures - Overview 5-1
General Information........ 5-1
Radiator Pressure Cap 5-13
General Information........ 5-13
Inspect for Reuse........ 5-14
Supplemental Coolant Additive (SCA) and Antifreeze Concentration 5-7
Maintenance Check........ 5-7

Downloaded from www.Manualslib.com manuals search engine

This Page Left Intentionally Blank

Downloaded from www.Manualslib.com manuals search engine

Maintenance Procedures - Overview

General Information

All maintenance checks and inspections listed in previous maintenance intervals **must** also be performed at this time, in addition to those listed under this maintenance interval.

Fuel Filter (Spin-On Type)

General Information

CAPS Fuel System

The CAPS fuel system requires the use of a single fuel filter. The filter **must** have the following characteristics:

- water-separating
- 10-micron rating
- water-in-fuel sensor
- water-drain valve
- engine mounted or chassis mounted.

Fleetguard® FS1022 meets these requirements.

Cummins Common Rail Fuel System

The Cummins Common Rail fuel system requires the use of two fuel filters. The suction side filter **must** have the following characteristics:

- water-separating
- 10-micron rating
- water-in-fuel sensor with shunt resistor
- water-drain valve
- **always** chassis mounted.

Fleetguard® FS1003 meets these requirements.

Racor model 1000MA meets these requirements for marine applications.

The pressure side filter **must** have the following characteristics:

- 2-micron rating
- engine mounted or chassis mounted.

Fleetguard® FF5488 meets these requirements.

The fuel supply and return valves **must** be closed when servicing the fuel filters on marine applications.

Refer to Procedure 100-001 in Section E for Engine Identification. The CM554 engine uses the CAPS fuel system. The CM850 engine uses the Cummins Common Rail fuel system.

Downloaded from www.Manualslib.com manuals search engine

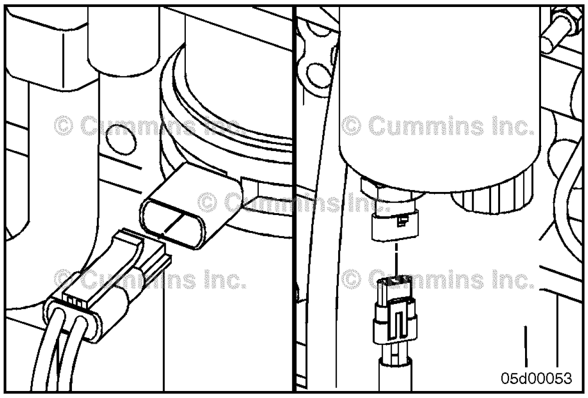

Remove

WARNING

Fuel is flammable. Keep all cigarettes, flames, pilot lights, arcing equipment, and switches out of the work area and areas sharing ventilation to reduce the possibility of severe personal injury or death when working on the fuel system.

CAUTION

Use caution when disconnecting or removing fuel lines, replacing filters and priming the fuel system that fuel is not spilled or drained into the bilge area. Do not drop or throw filter elements into the bilge area. The fuel and fuel filters must be discarded in accordance with local environmental regulations.

Close the fuel supply and return valves, if equipped.

Disconnect the wiring harness from the water-in-fuel sensor, if equipped.

Disconnect the wiring harness from the fuel heater, if equipped.

Loosen and remove the fuel filter.

Make sure the seal ring does **not** stick to the filter head.

Remove the ring with an o-ring pick, if necessary.

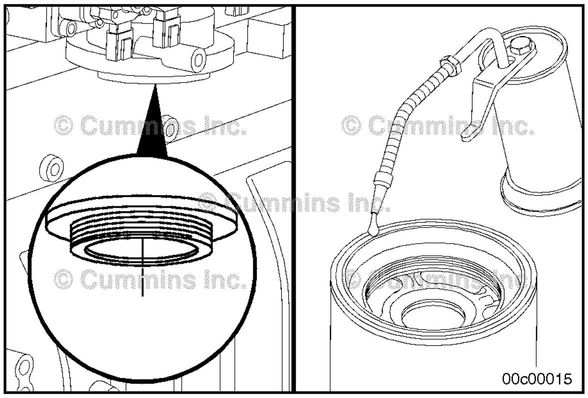

Install

CAPS Fuel System

CAUTION

Mechanical overtightening can distort the threads as well as damage the filter element seal or filter canister.

Do **not** fill the fuel filter with fuel before installation; instead, prime the fuel system using the fuel lift pump.

Be sure the center seal ring is installed onto the filter spud.

Install the filter as specified by the filter manufacturer.

Connect the water-in-fuel sensor and the fuel heater, if equipped.

Downloaded from www.Manualslib.com manuals search engine

Cummins Common Rail Fuel System

CAUTION

Mechanical overtightening can distort the threads as well as damage the filter element seal or filter canister.

It will be necessary to fill the 10-micron water stripping (suction side) fuel filter with fuel.

Do **not** fill the 2-micron (pressure side) fuel filter with fuel before installation; instead, prime the fuel system using the fuel lift pump.

Be sure the center seal ring is installed onto the filter spud.

Install the filter as specified by the filter manufacturer.

Connect the water-in-fuel sensor and the fuel heater, if equipped.

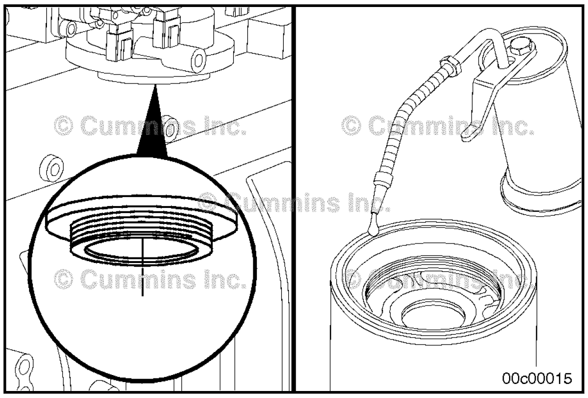

The Cummins Common Rail Fuel System is capable of detecting the presence of the correct water-in-fuel sensor.

If the water-in-fuel sensor is incompatible or disconnected, the engine WARNING lamp will illuminate.

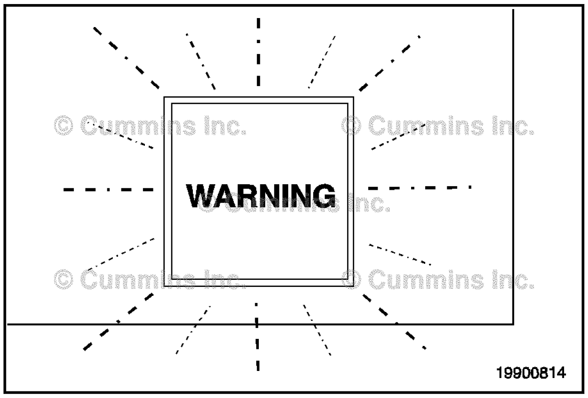

Prime

WARNING

Do not open the high-pressure fuel system with the engine running. Engine operation causes high fuel pressure. High-pressure fuel spray can cause serious injury or death.

Open the fuel supply and return valves, if equipped.

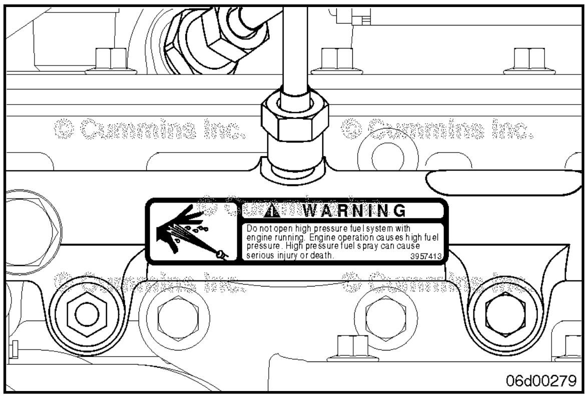

Downloaded from www.Manualslib.com manuals search engine

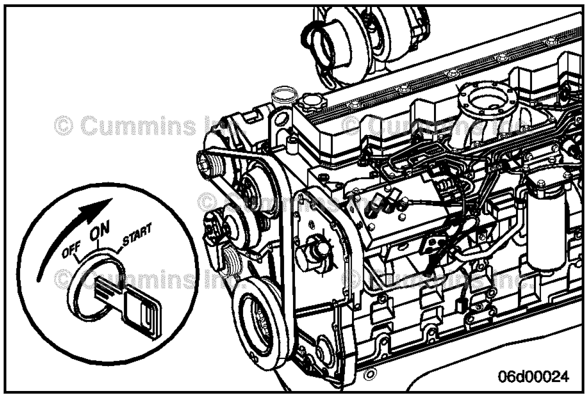

Cycle the keyswitch and allow the lift pump to run. The lift pump will run for 30 seconds. Afterwards, turn the keyswitch off and back on again allowing the lift pump to run again.

Allow the lift pump to run for three or four 30-second cycles before attempting to start the engine.

Finishing Steps

Operate the fuel lift pump to help prime the fuel system. Turn the keyswitch to RUN, but do **not** attempt to start the engine. This will cause the ECM to operate the fuel lift pump through a priming cycle which lasts at least 30 seconds. Cycle the lift pump several times by keying off, waiting 10 seconds and keying back on again.

Once the engine is started, slowly increase the engine speed while air is purged from the fuel plumbing.

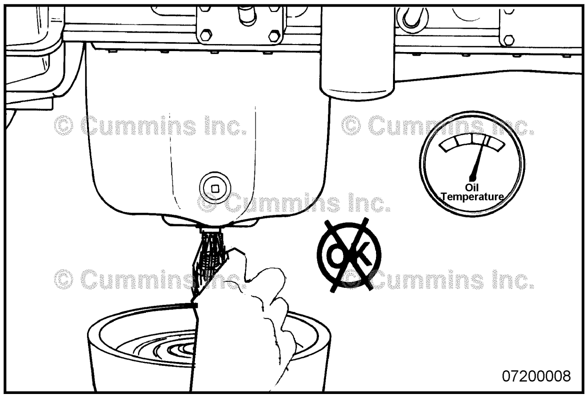

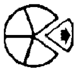

Lubricating Oil and Filters

Drain

WARNING

To reduce the possibility of personal injury, avoid direct contact of hot oil with your skin.

WARNING

Some state and federal agencies have determined that used engine oil can be carcinogenic and cause reproductive toxicity. Avoid inhalation of vapors, ingestion, and prolonged contact with used engine oil. If not reused, dispose of in accordance with local environmental regulations.

NOTE: Use a container that can hold at least 23.6 liters [25 qt] of lubricating oil.

NOTE: For composite oil pans, hold the external locking nut in position with a separate wrench while removing the drain plug. This will prevent the bulkhead from loosening during drain plug removal.

Operate the engine until the coolant temperature reaches 60°C [140°F]. Shut off the engine. Remove the oil drain plug. Drain the oil immediately to make sure all the oil and suspended contaminants are removed from the engine.

Downloaded from www.Manualslib.com manuals search engine

Remove

Clean the area around the lubricating oil filter head.

Using an oil filter wrench, remove the filter.

Clean the gasket surface of the filter head with a clean lint-free cloth.

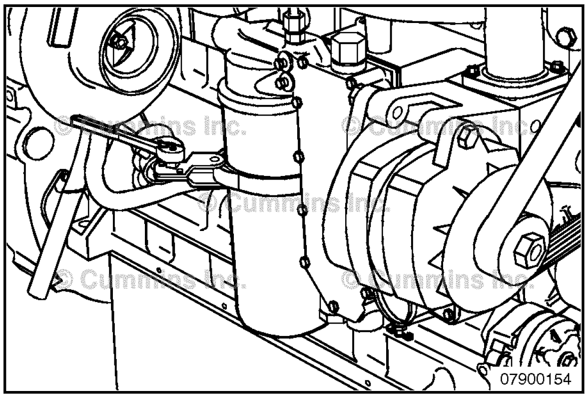

Install

⚠CAUTION⚠

The lubricating oil filter should be full of oil at start-up to prevent engine damage.

Use clean 15W-40 oil to coat the gasket surface of the filter.

Fill the filter with clean 15W-40 oil.

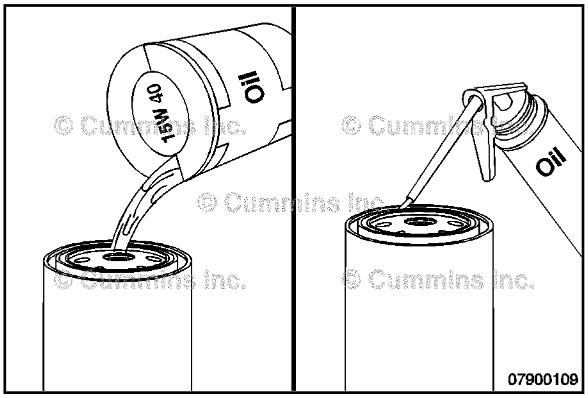

⚠CAUTION⚠

Mechanical overtightening of the filter can distort the threads or damage the filter element seal.

Install the filter on the oil filter head. Tighten the filter until the gasket contacts the filter head surface.

Tighten the filter according to the instructions supplied with the filter.

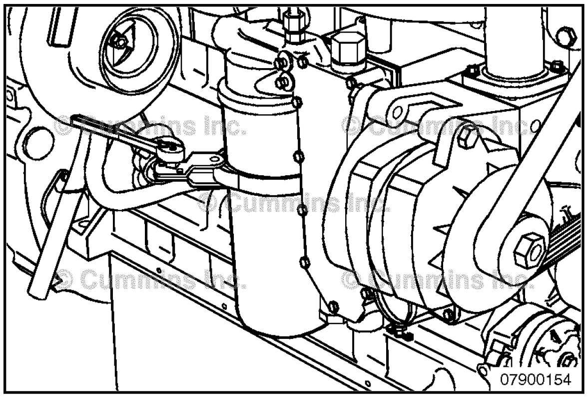

⚠CAUTION⚠

For composite oil pans, always use a new sealing washer on the oil drain plug. Hold the external locking nut in place while tightening the oil drain plug.

Clean and check the lubricating oil drain plug threads and sealing surface.

Install the lubricating oil pan drain plug.

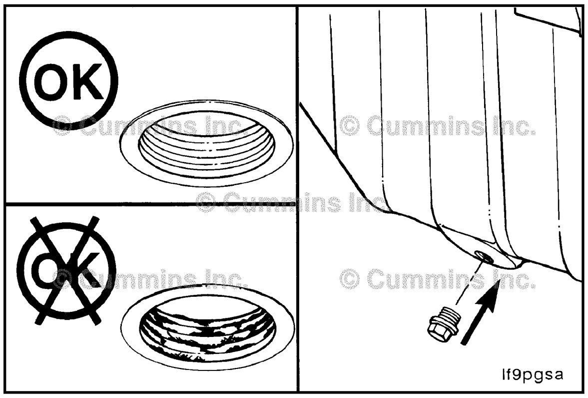

Torque Value		
	N•m	[ft-lb]
Steel Oil Pan	80	59
Cast Aluminum Oil Pan	60	45
Composite Oil Pan	60	45

Downloaded from www.Manualslib.com manuals search engine

Fill

NOTE: Use a high quality 15W-40 multiviscosity oil, such as Cummins Premium Blue®, or equivalent, in Cummins engines. Choose the correct oil for your operating climate as outlined in the Operation and Maintenance Manual.

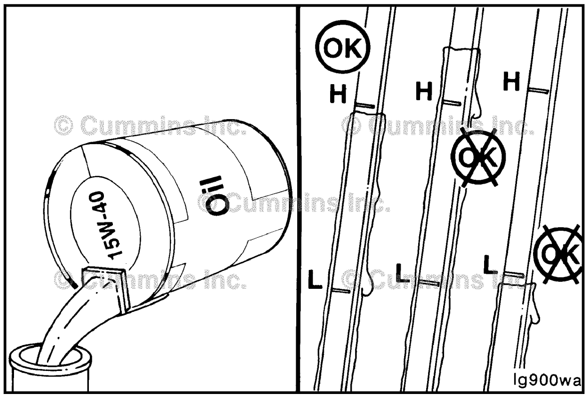

Fill the engine with clean lubricating oil to the proper level.

NOTE: When filling the oil pan, use the fill tube on the side of the engine rather than on top of the rocker lever cover.

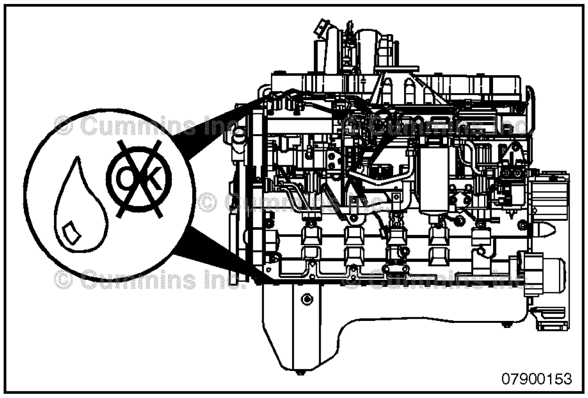

WARNING

If no oil pressure is noted within 15 seconds after the engine is started, shut down the engine to reduce the possibility of internal damage.

Idle the engine to inspect for leaks at the drain plug.

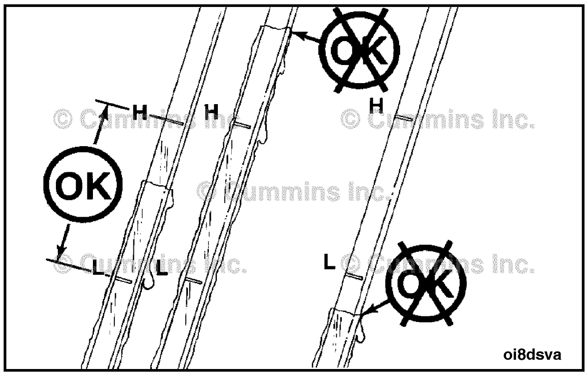

Shut off the engine. Wait approximately 10 minutes to let the oil drain from the upper parts of the engine. Check the level again.

Add oil as necessary to bring the oil level to the "H" (high) mark on the dipstick.

Downloaded from www.Manualslib.com manuals search engine

Supplemental Coolant Additive (SCA) and Antifreeze Concentration

Maintenance Check

Supplemental Coolant Additive (SCA)

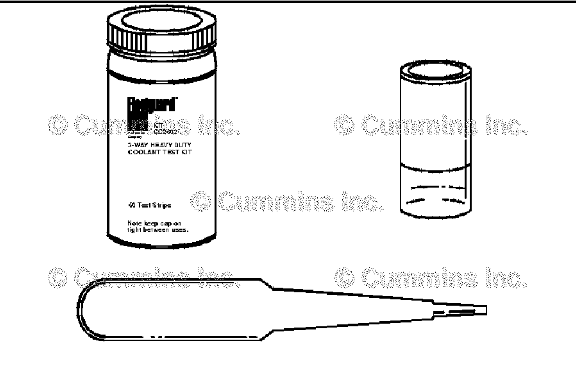
08200002

⚠CAUTION⚠

Failing to maintain the required SCA concentration level can cause engine damage.

Check the SCA concentration level

- At least twice a year
- At every subsequent oil drain interval if the concentration is above 3 units
- Whenever coolant is added to the cooling system between filter changes.

Use Fleetguard® coolant test kit, Part No. CC2602, to check the SCA concentration level. Instructions are included with the test kit. Use the Coolant Recommendations and Specifications in Maintenance Specifications (Section V) for the correct SCA and antifreeze level.

Antifreeze

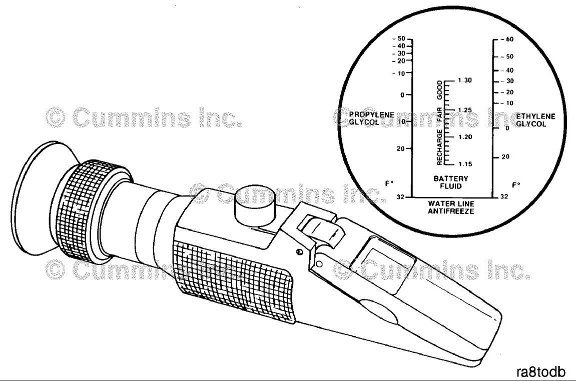

ra8todb

⚠CAUTION⚠

Overconcentration of antifreeze or use of high-silicate antifreeze can damage the engine.

Check the antifreeze concentration. Use a mixture of 50-percent water and 50-percent ethylene glycol or propylene glycol-based antifreeze to protect the engine to -32°C [-26°F] year-around.

The Fleetguard® refractometer, Part Number C2800, provides a reliable, easy-to-read, and accurate measurement of freezing point protection and glycol (antifreeze) concentration.

Antifreeze is essential in every climate.

Antifreeze broadens the operating temperature range by lowering the coolant freezing point and by raising its boiling point.

The corrosion inhibitors also protect the cooling system components from corrosion and prolong component life.

Downloaded from www.Manualslib.com manuals search engine

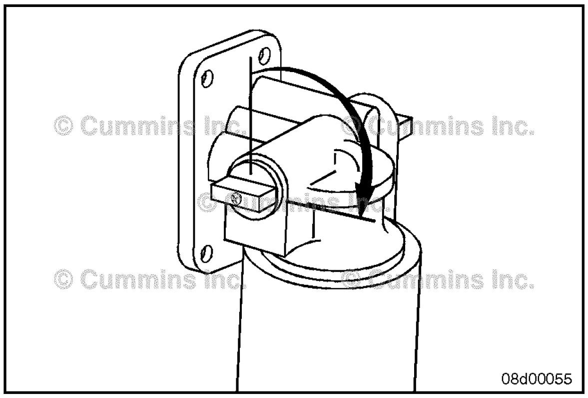

Coolant Filter

Remove

All Applications Except Marine

WARNING

Do not remove the pressure cap from a hot engine. Wait until the coolant temperature is below 50°C [120°F] before removing the pressure cap. Heated coolant spray or steam can cause personal injury.

NOTE: Some engine models do **not** require coolant filters.

Remove the coolant system pressure cap.

Turn the shutoff valve to the OFF position by rotating the knob from the vertical to the horizontal direction as shown.

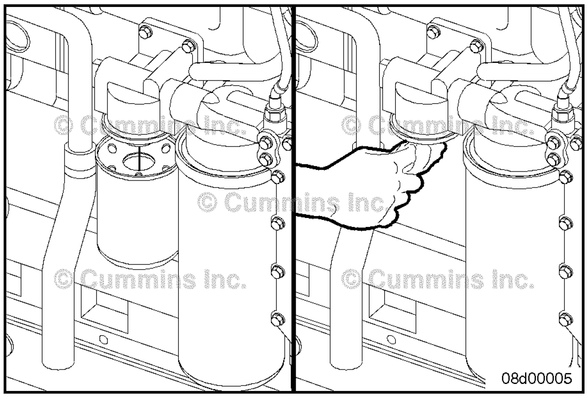

WARNING

A small amount of coolant can leak when servicing the coolant filter with the shutoff valve in the OFF position. To reduce the possibility of personal injury, avoid contact with hot coolant.

WARNING

Coolant is toxic. Keep away from children and pets. If not reused, dispose of in accordance with local environmental regulations.

Remove and discard the coolant filter.

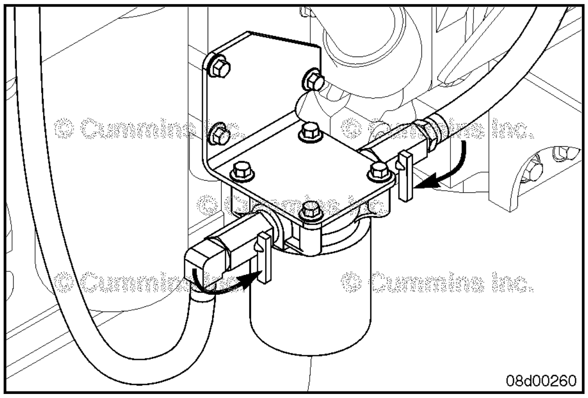

Marine Applications

WARNING

Do not remove the pressure cap from a hot engine. Wait until the coolant temperature is below 50°C [120°F] before removing the pressure cap. Heated coolant spray or steam can cause personal injury.

NOTE: It is possible that some marine engine models do **not** have coolant filters.

Remove the coolant system pressure cap.

Turn the inlet and outlet shutoff valves to the OFF position by rotating the knobs from the horizontal to the vertical direction as shown.

Downloaded from www.Manualslib.com manuals search engine

⚠WARNING⚠

A small amount of coolant can leak when servicing the coolant filter with the shutoff valve in the OFF position. To reduce the possibility of personal injury, avoid contact with hot coolant.

⚠WARNING⚠

Coolant is toxic. Keep away from children and pets. If not reused, dispose of in accordance with local environmental regulations.

⚠CAUTION⚠

Use caution when draining coolant that coolant is not spilled or drained into the bilge area. Do not pump the coolant overboard. If the coolant is not reused, it must be discarded in accordance with local environmental regulations.

Remove and discard the coolant filter.

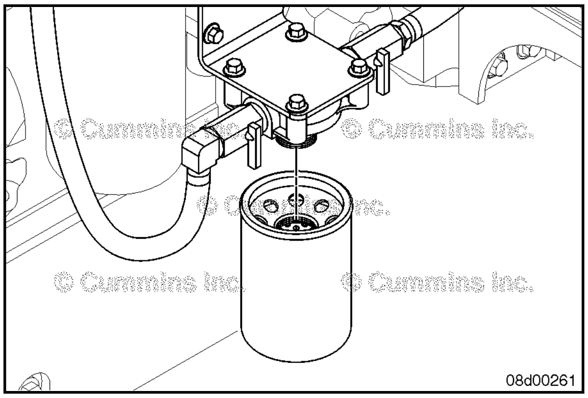

Install

All Applications Except Marine

⚠CAUTION⚠

Do not allow oil to get into the filter. Oil will damage the DCA.

⚠CAUTION⚠

Mechanical overtightening can distort the threads or damage the filter head.

Apply a thin film of lubricating oil to the gasket sealing surface before installing the new coolant filter.

Install the coolant filter on the filter head. Tighten the filter until the gasket contacts the filter head surface.

Tighten the coolant filter an additional 1/2 to 3/4 of a turn, or as specified by the filter manufacturer.

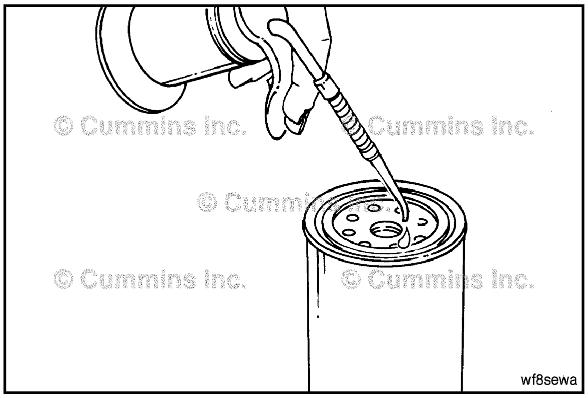

⚠CAUTION⚠

The valve must be in the ON position to prevent engine damage.

Turn the shutoff to the ON position by rotating the knob from the horizontal to the vertical position in the direction shown.

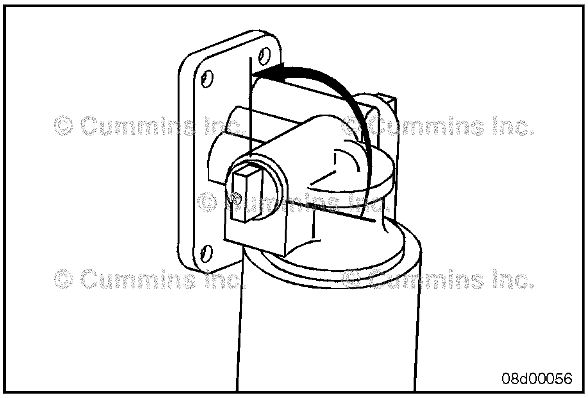

Downloaded from www.Manualslib.com manuals search engine

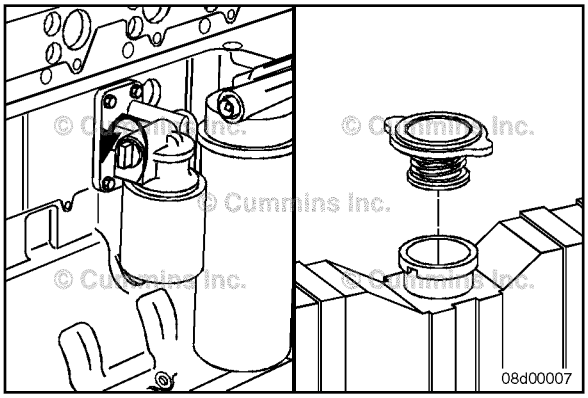

Install the coolant system pressure cap.

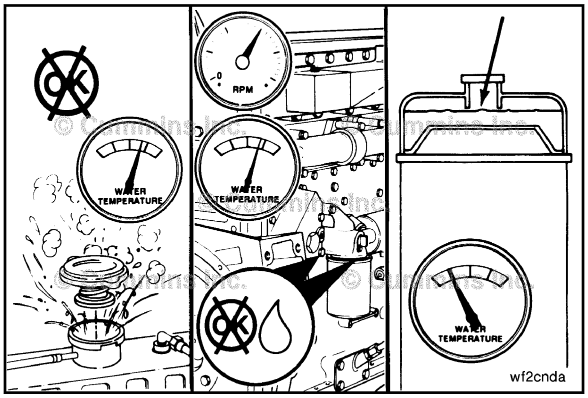

Operate the engine and check for coolant leaks.

After the air has been purged from the system, check the coolant level again.

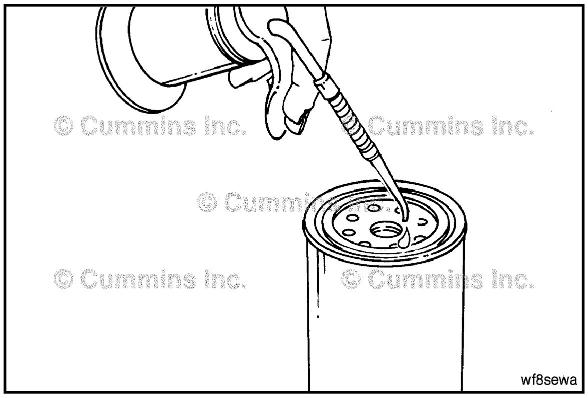

Marine Applications

⚠CAUTION⚠
Do not allow oil to get into the filter. Oil will damage the DCA.

⚠CAUTION⚠
Mechanical overtightening can distort the threads or damage the filter head.

Apply a thin film of lubricating oil to the gasket sealing surface before installing the new coolant filter.

Install the coolant filter on the filter head. Tighten the filter until the gasket contacts the filter head surface.

Tighten the coolant filter an additional 1/2 to 3/4 of a turn, or as specified by the filter manufacturer.

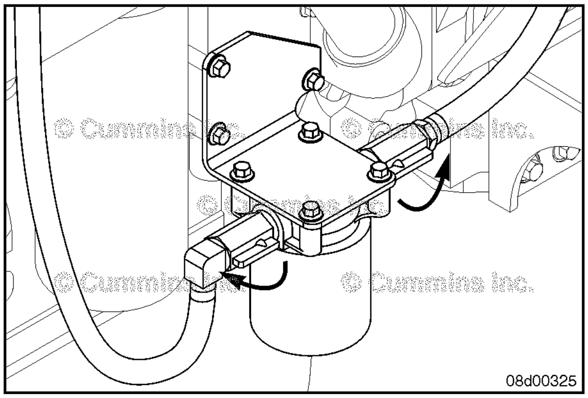

⚠CAUTION⚠
The valve must be in the ON position to prevent engine damage.

Turn the shutoff valves to the ON position by rotating the knobs from the vertical to the horizontal position in the direction shown.

Downloaded from www.Manualslib.com manuals search engine

Install the coolant system pressure cap.

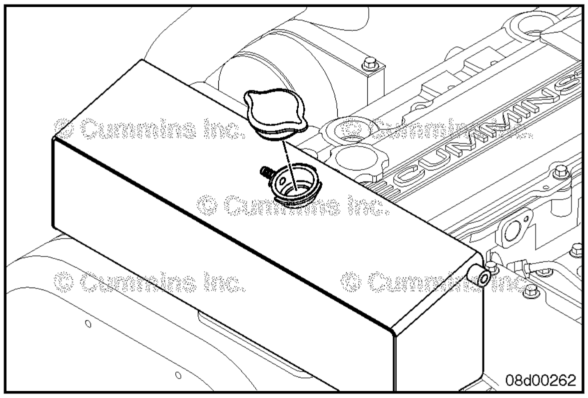

Operate the engine and check for coolant leaks.

After the air has been purged from the system, check the coolant level again.

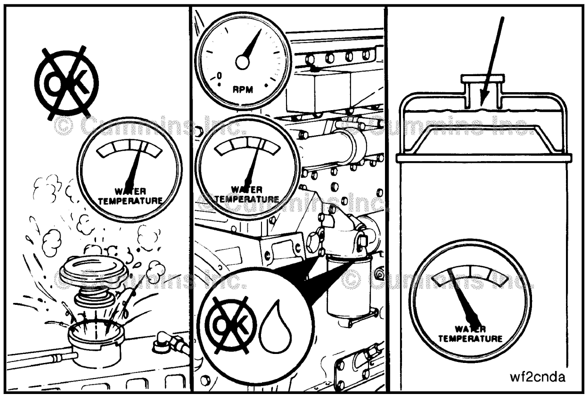

Batteries

Inspect

Use an inductive charging and cranking system analyzer to load-test the state of charge of maintenance-free batteries. If the state of charge is low, use a battery charger to charge the battery. Refer to the manufacturer's instructions.

Replace the battery if it will **not** charge to the manufacturer's specifications or the battery will **not** maintain a charge.

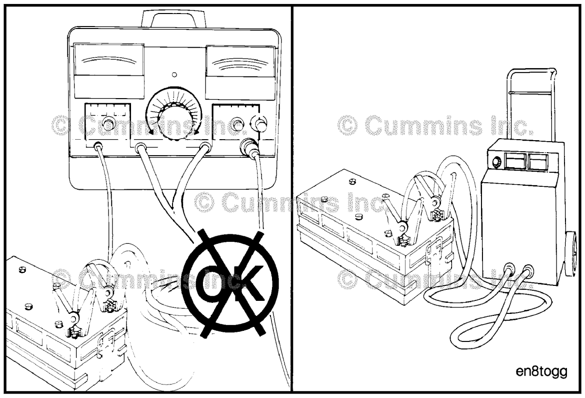

If conventional batteries are used, remove the cell caps or covers and check the electrolyte (water and sulfuric acid solution) level.

⚠WARNING⚠

Batteries can emit explosive gas. To reduce the possibility of personal injury, always ventilate the compartment before servicing the batteries. To reduce the possibility of arcing, remove the battery (-) negative cable first and attach the battery negative cable last.

NOTE: Maintenance-free batteries are sealed and do **not** require the addition of water.

Fill each battery cell with water. Refer to the manufacturer's specifications.

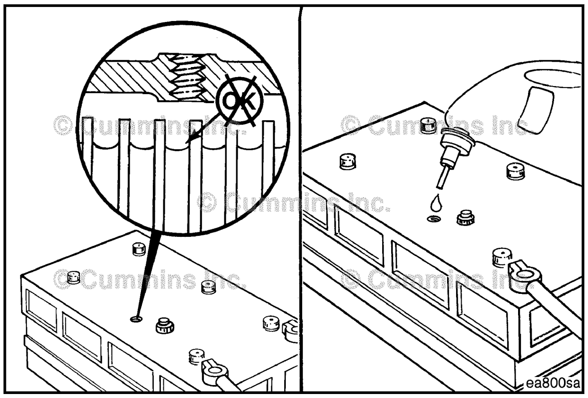

Downloaded from www.Manualslib.com manuals search engine

Refer to the accompanying table to determine the battery state of charge based on the specific-gravity readings.

Battery State of Charge	Specific Gravity @ 27°C [80°F]
100%	1.260 to 1.280
75%	1.230 to 1.250
50%	1.200 to 1.220
25%	1.170 to 1.190
Discharged	1.110 to 1.130

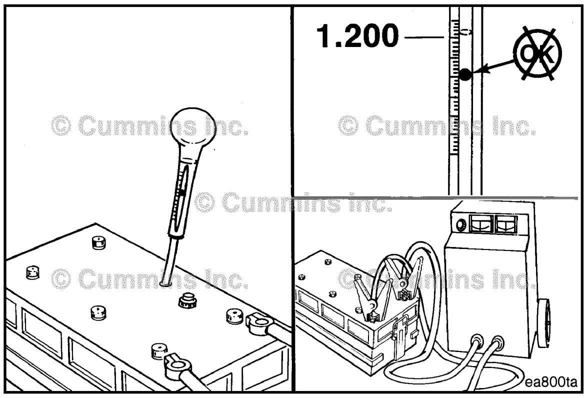

Use a hydrometer to measure the specific gravity of each cell.

NOTE: If the specific gravity of any cell is below 1.200, the battery **must** be charged.

NOTE: Do **not** attempt to check the specific gravity of a battery immediately after adding water. If it is necessary to add water to allow use of the hydrometer, charge the battery several minutes at a high rate to mix the electrolyte.

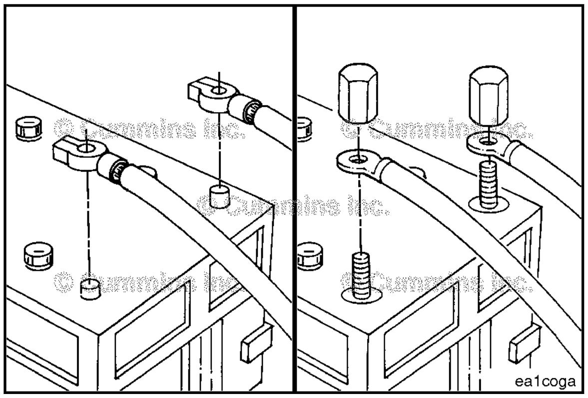

Battery Cables and Connections

Initial Check

There are two possible heavy-duty battery connections:

- Battery terminal and clamp (1)
- Threaded battery terminal and nut (2).

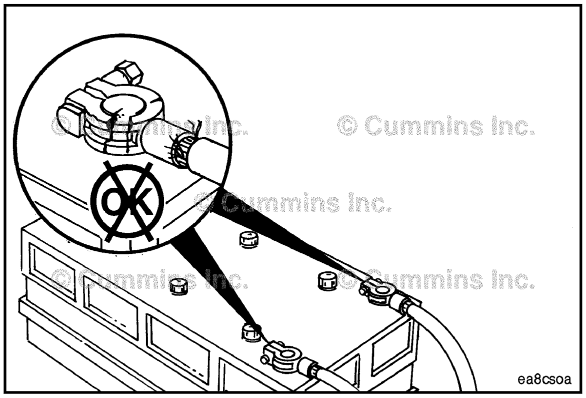

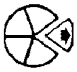

WARNING

Batteries can emit explosive gases. To reduce the possibility of personal injury, always ventilate the compartment before servicing the batteries. To reduce the possibility of arcing, remove the negative (-) battery cable first and attach the negative (-) battery cable last.

Remove and inspect the battery cables and connections for cracks or corrosion.

Replace broken terminals, connectors, or cables.

Downloaded from www.Manualslib.com manuals search engine

If the connections are corroded, use a battery brush or wire brush to clean the connections until shiny.

Make sure all debris is removed from the connecting surfaces.

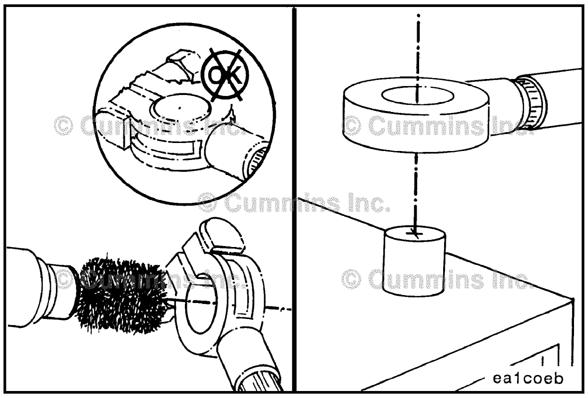

WARNING

Batteries can emit explosive gases. To reduce the possibility of personal injury, always ventilate the compartment before servicing the batteries. To reduce the possibility of arcing, remove the negative (-) battery cable first and attach the negative (-) battery cable last.

Install the cables and tighten the battery connections.

Coat the terminals with grease to prevent corrosion.

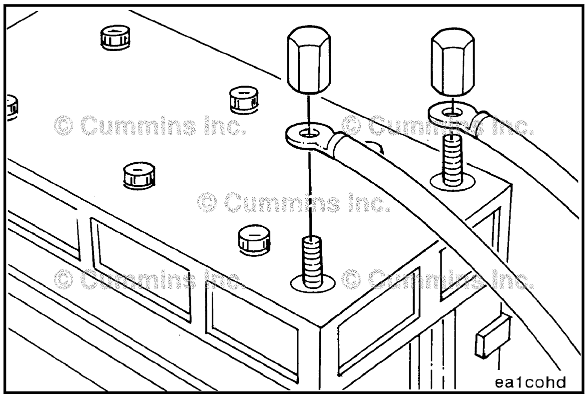

Radiator Pressure Cap

General Information

The system is designed to use a pressure cap to prevent boiling of the coolant.

Radiator Cap Pressure Test	
System Temperature	**Cap (Pressure Rating)**
104°C [220°F]	103 kPa [15 psi]

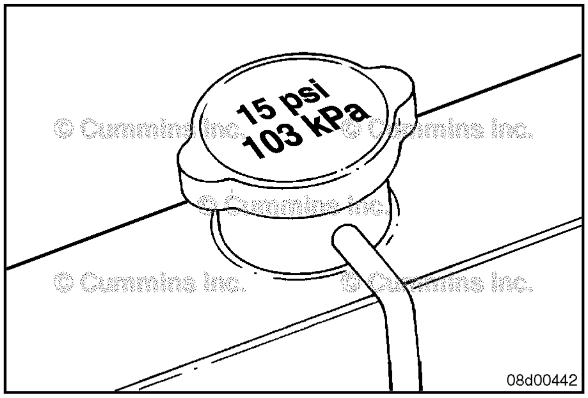

An incorrect or malfunctioning cap can result in the loss of coolant and the engine running hot.

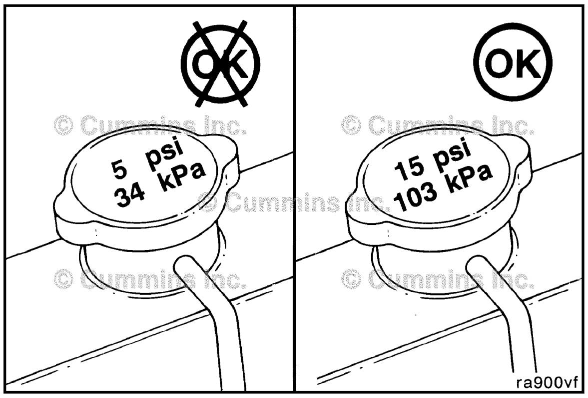

Downloaded from www.Manualslib.com manuals search engine

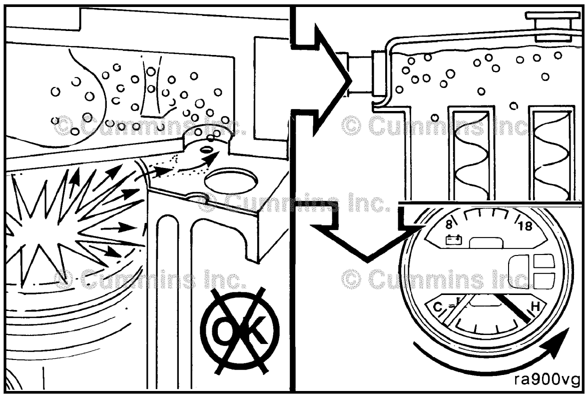

Air in the coolant can result in loss of coolant from the overflow when the aerated coolant is hot. The heated air expands, increasing the pressure in the system, causing the cap to open.

Similarly, coolant can be displaced through the overflow if the head gasket leaks compression gases into the cooling system.

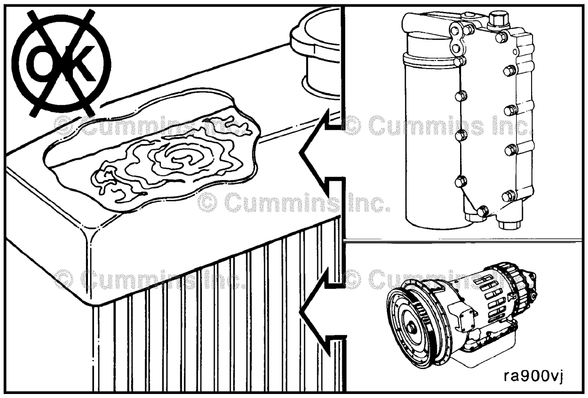

NOTE: Transmission fluid can also leak into the coolant through radiator bottom tank transmission oil coolers.

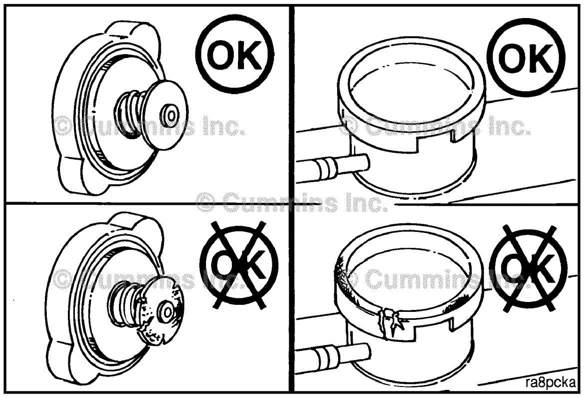

Inspect for Reuse

Be sure the correct radiator cap is being used. Refer to Procedure 018-018 in Section V.

Inspect the rubber seal of the pressure cap for damage.

Inspect the radiator fill neck for cracks or other damage.

Refer to the OEM service manual for instructions if the fill neck is damaged.

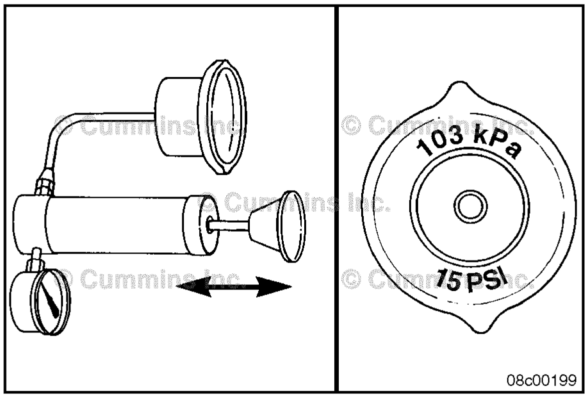

Pressure-test the radiator cap.

The pressure cap **must** seal within 14 kPa [2 psi] of the value stated on the cap, or it **must** be replaced.

Refer to the OEM service manual for the radiator cap test procedure.

Downloaded from www.Manualslib.com manuals search engine

Section 6 - Maintenance Procedures at 1000 Hours or 1 Year

Section Contents

Page
Drive Belt, Cooling Fan 6-3
Install 6-3
Remove 6-3
Drive Belts 6-1
Maintenance Check 6-1
Fan Hub, Belt Driven 6-3
Maintenance Check 6-3
Maintenance Procedures - Overview 6-1
General Information 6-1
Turbocharger 6-4
Inspect for Reuse 6-4

Downloaded from www.Manualslib.com manuals search engine

This Page Left Intentionally Blank

Downloaded from www.Manualslib.com manuals search engine

Maintenance Procedures - Overview

General Information

All maintenance checks and inspections listed in previous maintenance intervals **must** also be performed at this time, in addition to those listed under this maintenance interval.

Drive Belts

Maintenance Check

Poly-Vee Belt

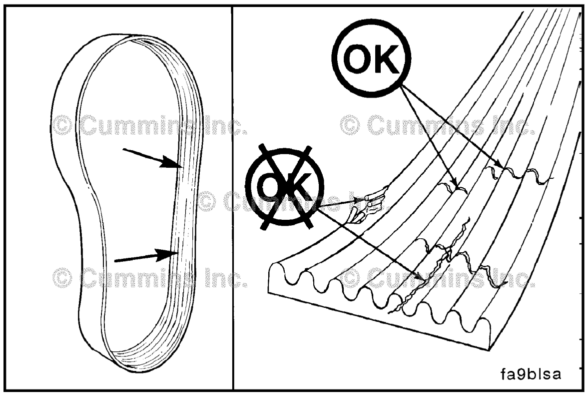

CAUTION

Make sure that the engine is switched off and any starting mechanisms are isolated before any inspections are made. Daily belt inspections can be carried out through an appropriate aperture. Do not remove any guards.

Inspect the belts daily. Check the belt for intersecting cracks. Traverse (across the belt width) cracks are acceptable. Longitudinal (direction of belt length) cracks that intersect with transverse cracks are **not** acceptable. Replace the belt if it is frayed or has pieces of material missing. Refer to Section A for belt adjustment and replacement procedures.

Belt damage can be caused by:

- Incorrect tension
- Incorrect size or length
- Pulley misalignment
- Incorrect installation
- Severe operating environment
- Oil or grease on the side of belts.

Downloaded from www.Manualslib.com manuals search engine

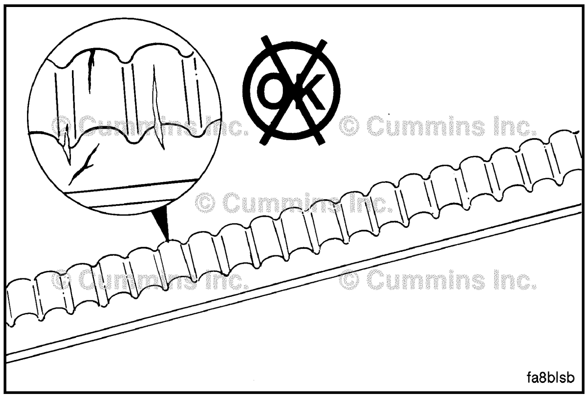

Cogged Belt

Inspect the belts daily. Replace the belts if they are cracked, frayed, or have chunks of material missing. Small cracks are acceptable.

Adjust the belts that have a glazed or shiny surface, which indicates belt slippage. Correctly installed and tensioned belts will show even pulley and belt wear. Refer to Section A for belt adjustment and replacement procedures.

Belt damage can be caused by:

- Incorrect tension
- Incorrect size or length
- Pulley misalignment
- Incorrect installation
- Severe operating environment
- Oil or grease on the belts

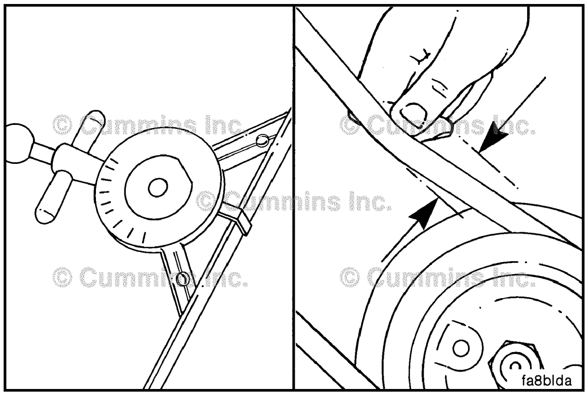

Measure the belt tension in the center span of the pulleys.

Refer to the Belt Tension Chart in Section V for the correct gauge and tension value for the belt width used.

An alternate method (deflection method) can be used to check belt tension by applying 110 N [25 lbf] force between the pulleys on v-belts. If the deflection is more than one belt thickness per foot of pulley center distance, the belt tension **must** be adjusted.

Refer to Section A for adjustment procedures.

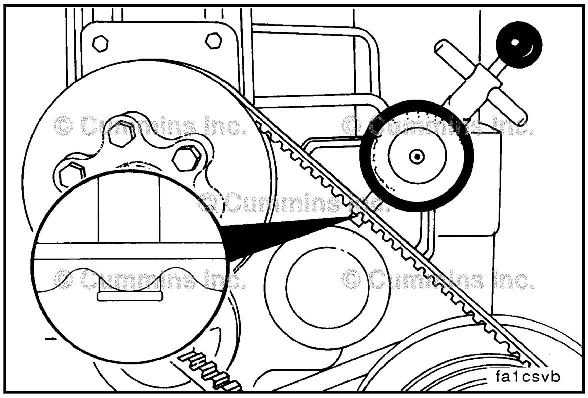

For cogged belts, **make sure** that the belt tension gauge is positioned so that the center tensioning leg is placed directly over the high point (hump) of a cog. Other positioning will result in incorrect measurement.

Downloaded from www.Manualslib.com manuals search engine

Fan Hub, Belt Driven

Maintenance Check

Remove the drive belt.

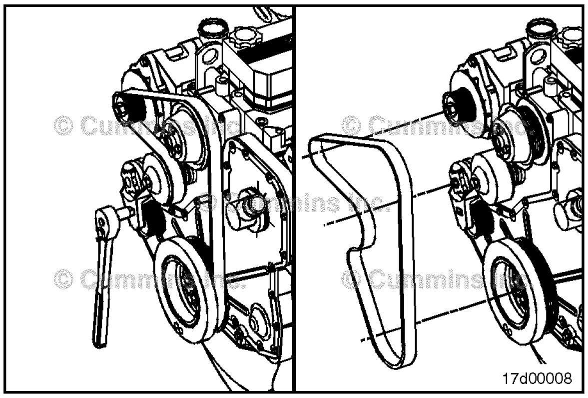

NOTE: The fan hub **must** rotate without any wobble or excessive end play.

Check the fan hub bearing.

Fan Hub End Play		
mm		**in**
0.15	MAX	0.006

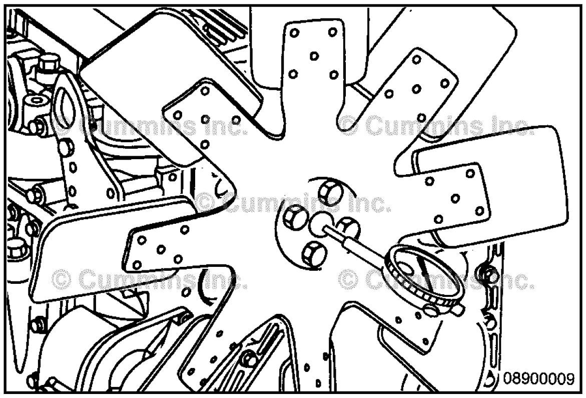

Drive Belt, Cooling Fan

Remove

Lift the tensioner to remove the drive belt.

NOTE: The belt tensioner is spring-loaded and **must** be pivoted away from the drive belt. Pivoting in the wrong direction can result in damage to the belt tensioner.

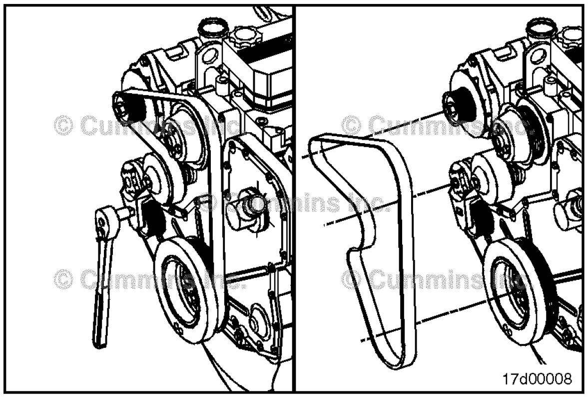

Install

Lift and hold the belt tensioner. Install the drive belt and release the tensioner.

NOTE: The belt tensioner is spring-loaded and **must** be pivoted away from the drive belt. Pivoting in the wrong direction can result in damage to the belt tensioner.

Service Tip: If difficulty is experienced installing the drive belt (i.e., the belt seems too short), position the belt over the grooved pulleys first then while holding the tensioner up, slide the belt over the water pump pulley.

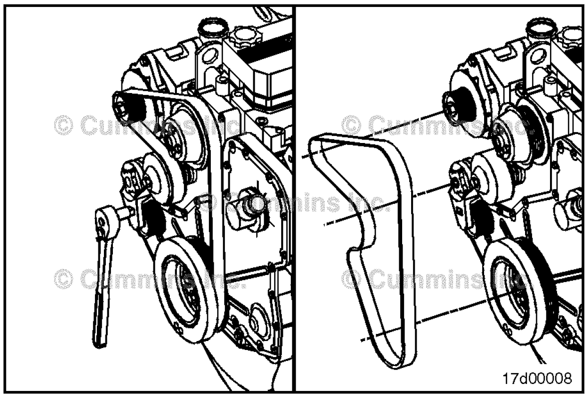

Downloaded from www.Manualslib.com manuals search engine

Turbocharger

Inspect for Reuse

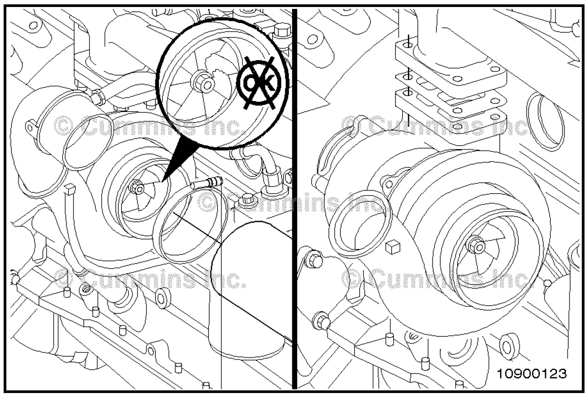

Remove the intake pipe from the turbocharger.

Inspect the turbocharger compressor impeller blades for damage.

Replace the turbocharger if damage is found. Contact a Cummins® Authorized Repair Location for replacement.

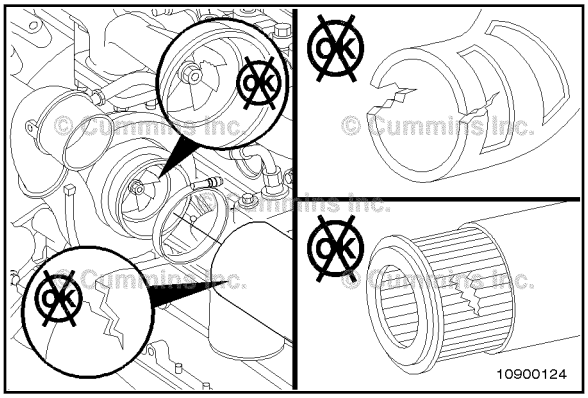

If the compressor impeller is damaged, inspect the intake piping and filter element for damage.

Repair any damage before operating the engine.

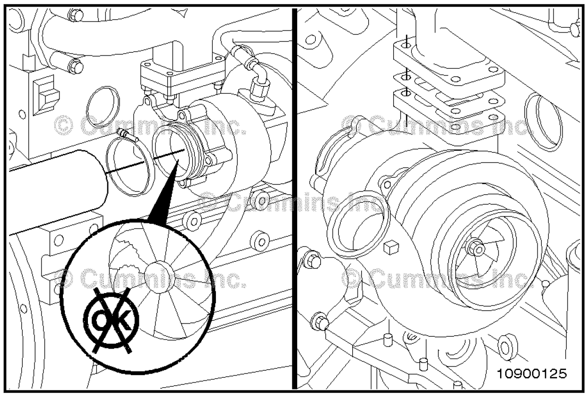

Remove the exhaust pipe from the turbocharger.

Inspect the turbine wheel for damage.

Replace the turbocharger if damage is found. Contact a Cummins® Authorized Repair Location for replacement.

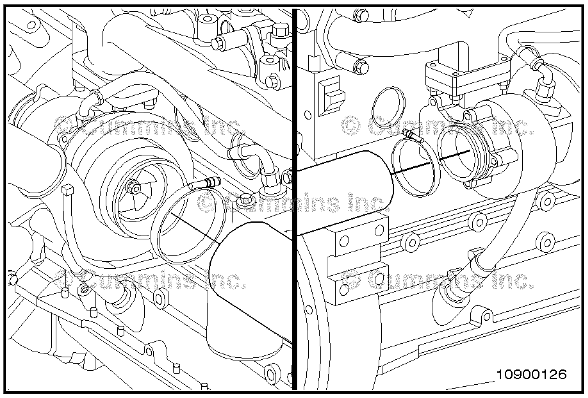

Install the intake pipe and tighten the clamp.

Install the exhaust pipe and tighten the clamp.

Torque Value: 8 N•m [71 in-lb]

Downloaded from www.Manualslib.com manuals search engine

Section 7 - Maintenance Procedures at 2000 Hours or 2 Years

Section Contents

Page
Air Compressor Discharge Lines 7-9
General Information....7-9
Maintenance Check....7-9
Cooling System 7-1
Drain....7-1
Fill....7-2
Flush....7-4
Engine Mounting Bolts 7-10
Maintenance Check....7-10
Engine Steam Cleaning 7-8
Clean....7-8
Maintenance Procedures - Overview 7-1
General Information....7-1
Radiator Hoses 7-8
Maintenance Check....7-8
Vibration Damper, Rubber 7-7
Inspect for Reuse....7-7
Vibration Damper, Viscous 7-8
Inspect....7-8

Downloaded from www.Manualslib.com manuals search engine

This Page Left Intentionally Blank

Downloaded from www.Manualslib.com manuals search engine

Maintenance Procedures - Overview

General Information

All maintenance checks and inspections listed in previous maintenance intervals **must** also be performed at this time, in addition to those listed under this maintenance interval.

Cooling System

Drain

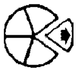

WARNING

Do not remove the pressure cap from a hot engine. Wait until the coolant temperature is below 50°C [120°F] before removing the pressure cap. Heated coolant spray or steam can cause personal injury.

Remove the pressure cap.

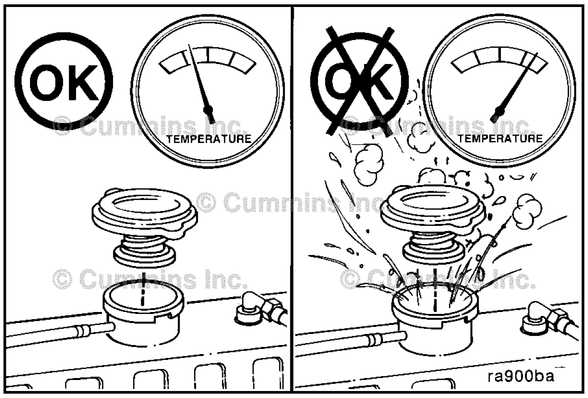

WARNING

Coolant is toxic. Keep away from children and pets. If not reused, dispose of in accordance with local environmental regulations.

A drain pan with a capacity of 19 liters [5 gal] will be adequate for most applications.

Drain the cooling system by opening the drain valve on the radiator and removing the plug in the bottom of the water inlet hose.

After the cooling system is completely drained, close the drain valves.

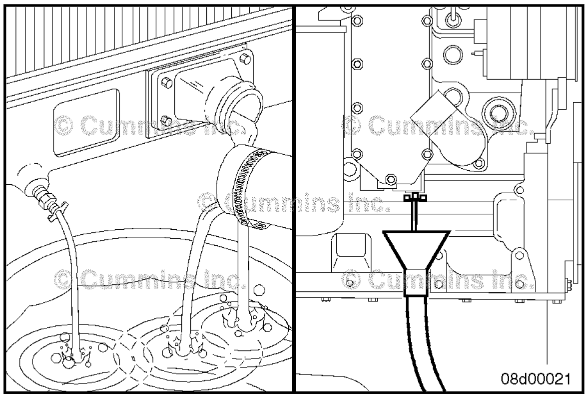

Check for damaged hoses and loose or damaged hose clamps. Replace as required.

Check the radiator for leaks, damage, and buildup of dirt.

Clean and replace as required.

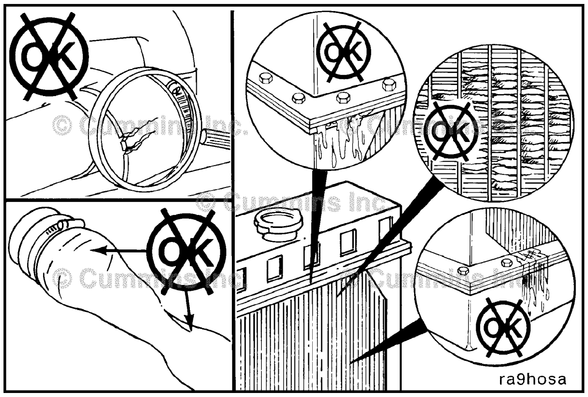

Downloaded from www.Manualslib.com manuals search engine

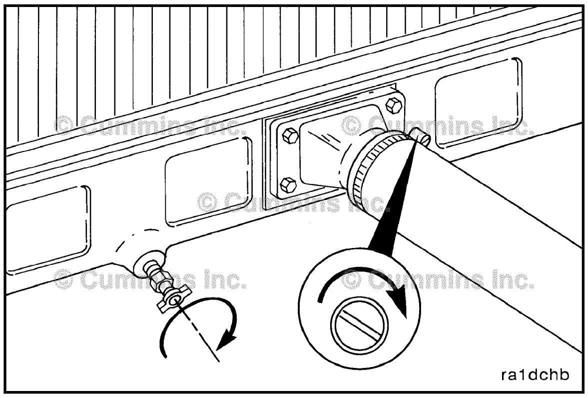

Fill

Close the radiator draincocks.

Install the lower radiator hose(s).

Tighten the hose clamps.

Torque Value: 5 N•m [44 in-lb]

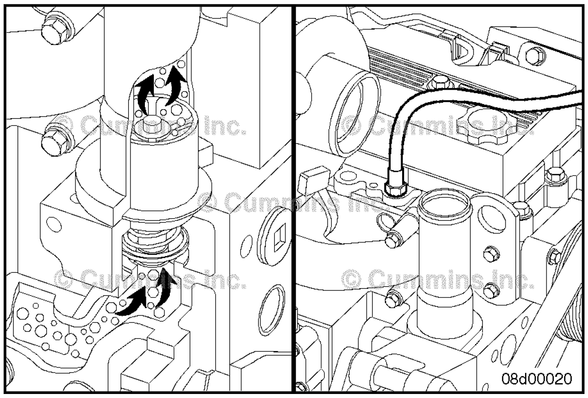

The system is designed to use a specific quantity of coolant. If the coolant level is low, the engine will operate at a higher than normal temperature.

If the addition of coolant is necessary, the engine or system has a leak. Find and repair the leak.

The system has a designed fill rate of 19 liters [5 gal] per minute.

Cummins Inc. recommends Fleetguard® Compleat ES™ heavy duty coolant. It is available in glycol forms (ethylene and propylene) and complies with ASTM D6210 (EG) and ASTM D6211 (PG) specifications.

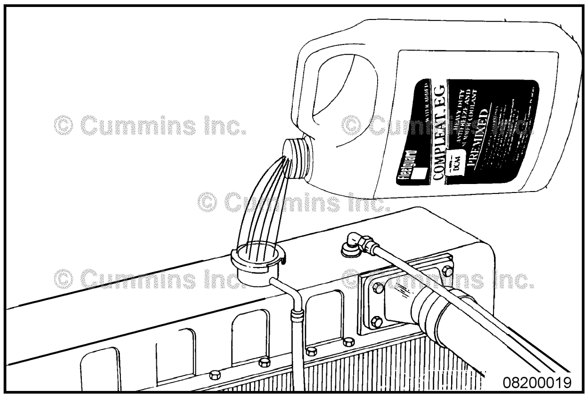

Fill the cooling system with heavy-duty coolant and install the correct service filter (if equipped).

Downloaded from www.Manualslib.com manuals search engine

Install the pressure cap. Operate the engine until the coolant reaches a temperature of 80°C [176°F] and check for coolant leaks.

Check the coolant level again to make sure that the system is full of coolant or that the coolant level has risen to the hot level in the recovery bottle on the system, if so equipped.

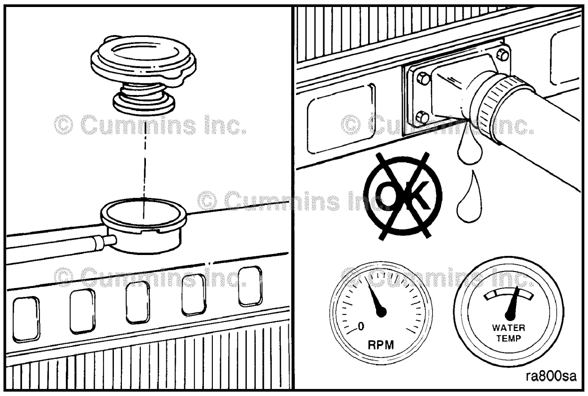

WARNING

Do not stand near the surge tank or radiator while operating the engine with the pressure cap off. If the vehicle is equipped with a fill door on side of the surge tank, keep it closed due to coolant expansion.

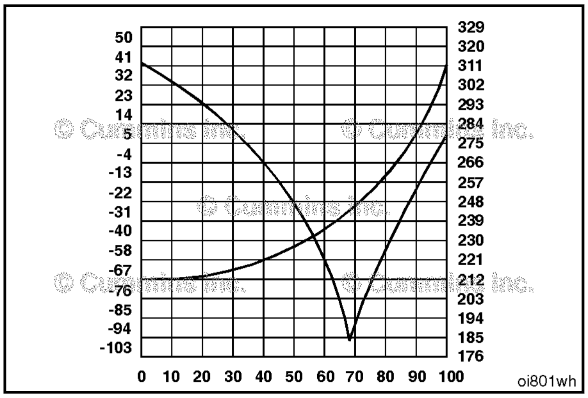

Low silicate antifreeze **must** be mixed with quality water at a 50/50 ratio (40 to 60 percent working range). A 50/50 mixture of antifreeze and water gives a -37°C [-34°F] freeze point and a boiling point of 109°C [228°F].

The actual lowest freeze point of ethylene glycol antifreezes is at 68 percent, The use of higher concentrations of antifreeze will raise the freeze point of the solution and increase the possibility of a silicate gel problem.

Remove the pressure cap.

Fill the cooling system to the capacity or level stated in the OEM service manual using a mixture of 50 percent water and 50 percent ethylene glycol or propylene glycol antifreeze.

Open all coolant flow valves to equipment heating systems. See the OEM service manual for valve locations.

Wait 2 to 3 minutes, without starting the engine, to allow the coolant level to stabilize.

Add a 50/50 mixture to bring the coolant level back to FULL.

Turn all cab heater switches to HIGH in order to allow maximum coolant flow through heater core(s). The blower does **not** have to be on.

With the pressure cap off:

- Operate the engine at LOW Idle for 2 minutes.
- Shut the engine OFF and add coolant to bring the level back to FULL, using a 50/50 mixture.

With the pressure cap off:

- Operate the engine at LOW IDLE for 1 minute to allow adequate oil pressure to build throughout the engine.

Downloaded from www.Manualslib.com manuals search engine

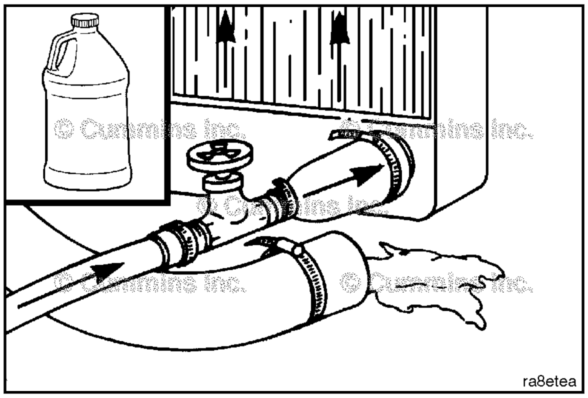

Flush

WARNING

Do not use caustic cleaners in the cooling system. Aluminum components will be damaged.

The cooling system **must** be clean to work correctly and to eliminate buildup of harmful chemicals.

Fleetguard® Restore™ is a heavy-duty cooling system cleaner that removes corrosion, silica gel, and other deposits. The performance of Fleetguard® Restore™ is dependent on time, temperature, and concentration levels. An extremely scaled or flow-restricted system, for example, can require higher concentrations of cleaners, higher temperatures, longer cleaning times, or the use of Restore Plus™. Up to twice the recommended concentration levels of Fleetguard® Restore™ can be used safely. Fleetguard® Restore Plus™ **must** be used **only** at its recommended concentration level. Extremely scaled or fouled systems can require more than one cleaning.

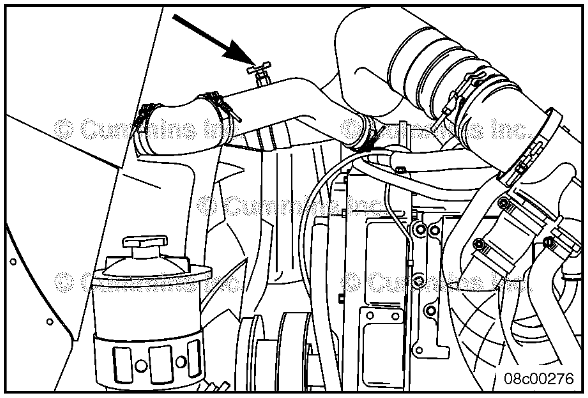

CAUTION

Fleetguard® Restore™ contains no antifreeze. Do not allow the cooling system to freeze during the cleaning operation.

CAUTION

Opening the manual bleed valve on applicable installations is critical. Failure to do so can result in engine damage.

NOTE: Some applications can have a manual bleed valve that is required to be opened to properly fill the system. The upper radiator pipe is a common location for bleed valves. The illustration is for reference **only**.

If applicable, open the manual bleed valve before filling the cooling system.

Once filled, close the manual bleed valve.

Downloaded from www.Manualslib.com manuals search engine

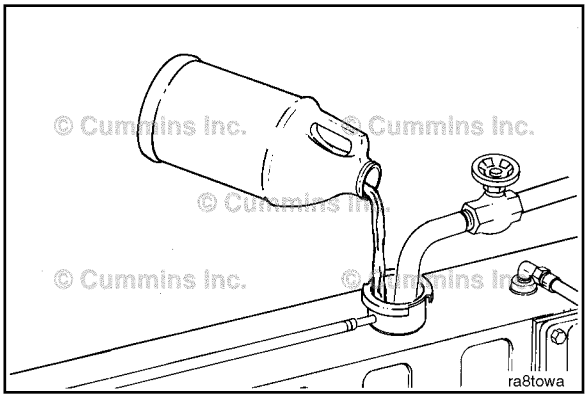

⚠WARNING⚠
Do not stand near the surge tank or radiator while operating the engine with the pressure cap off. If the vehicle is equipped with a fill door on the side of the surge tank, keep it closed due to coolant expansion.

⚠CAUTION⚠
Fleetguard® Restore™ contains no antifreeze. Do not allow the cooling system to freeze during the cleaning operation.

⚠CAUTION⚠
Opening the manual bleed valve on applicable installations is critical. Failure to do so can result in engine damage.

⚠CAUTION⚠
The system must be filled properly to prevent air locks or serious engine damage can result. During filling, air must be purged from the engine coolant passages. Make sure to open the petcock on the aftercooler for aftercooled engines. Wait 2 to 3 minutes to allow the air to be vented; then add the mixture to bring the coolant level to the top.

NOTE: Some applications can have a manual bleed valve that is required to be opened to properly fill the system. The upper radiator pipe is a common location for bleed valves. The illustration is for reference **only.**

If applicable, open the manual bleed valve before filling the cooling system.

Once filled, close the manual bleed valve.

NOTE: Add 3.8 liters [1 gal] of Fleetguard®, Restore™, Restore Plus™, or equivalent for each 38 to 57 liters [10 to 15 gal] of cooling system capacity.

Fill the cooling system to the capacity or level stated in the OEM service manual.

Use plain water.

Open all coolant flow valves to equipment heating systems. See the OEM service manual for valve locations.

Wait 2 to 3 minutes, without starting the engine, to allow the coolant level to stabilize.

Add plain water to bring the level back to FULL.

Turn all cab heater switches to HIGH in order to allow maximum coolant flow through the heater core(s). The blower does **not** have to be ON.

With the pressure cap off:

- Operate the engine at LOW IDLE for 2 minutes.
- Shut the engine OFF and add plain water to bring the level back to FULL.

With the pressure cap off:

- Operate the engine at LOW IDLE for 1 minute to allow adequate oil pressure to build throughout the engine.
- Operate the engine at HIGH IDLE until the thermostat opens.

Operate the engine at low idle 2 minutes before shutting it down. This allows adequate cool down of pistons, cylinders, bearings, and turbocharger components.

Shut the engine OFF and check the coolant level according to the OEM service manual recommendations and add coolant, if necessary, to bring it back to the FULL level.

Install the pressure cap.

Downloaded from www.Manualslib.com manuals search engine

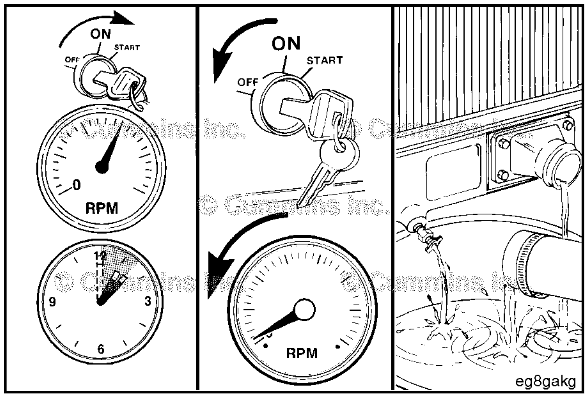

⚠WARNING⚠

Do not remove the pressure cap from a hot engine. Wait until the coolant temperature is below 50°C [120°F] before removing the pressure cap. Heated coolant spray or steam can cause personal injury.

⚠WARNING⚠

Coolant is toxic. Keep away from children and pets. If not reused, dispose of in accordance with local environmental regulations.

Operate the engine at normal operating temperatures, at least 85°C [185°F], for 1 to 1 ½ hours.

Shut the engine OFF allow to cool to 50°C [122°F], and drain the cooling system.

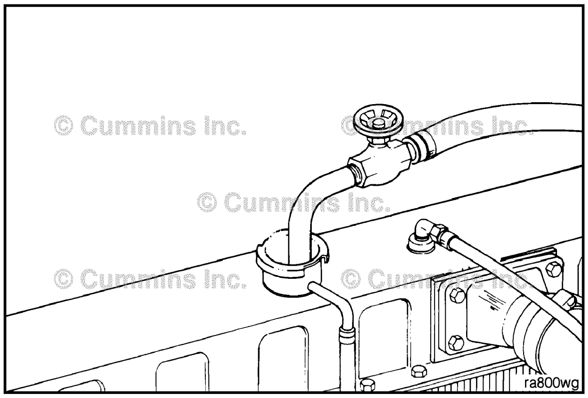

⚠WARNING⚠

Do not stand near the surge tank or radiator while operating engine with the pressure cap OFF. If the vehicle is equipped with fill door on the side of the surge tank, keep it closed due to coolant expansion.

Remove the pressure cap.

Fill the cooling system to the capacity or level stated in the OEM service manual.

Open all coolant flow valves to equipment heating systems. See the OEM service manual for valve locations.

Wait 2 to 3 minutes without starting the engine to allow the system to naturally purge entrained air and the coolant level to stabilize.

Add plain water to bring the level back to FULL.

Turn all cab heater switches to HIGH in order to allow maximum coolant flow through the heater core(s). The blower **must** be turned ON.

With the pressure cap off:

- Operate the engine at LOW IDLE for 2 minutes.
- Shut the engine OFF and add plain water to bring the level back to FULL.

With the pressure cap off:

- Operate the engine al LOW Idle for 1 minute to allow adequate oil pressure to build throughout the engine.
- Operate the engine at HIGH Idle until the thermostat opens.

Continue to operate the engine at HIGH idle for 5 minutes with the coolant temperature above 85°C [185°F].

Allow the engine to idle 2 minutes before shutting it down. This allows adequate cool down of pistons, cylinders, bearings, and turbocharger components.

Downloaded from www.Manualslib.com manuals search engine

⚠WARNING⚠
Do not remove the pressure cap from a hot engine. Wait until the coolant temperature is below 50°C [120°F] before removing the pressure cap. Heated coolant spray or steam can cause personal injury.

⚠WARNING⚠
Coolant is toxic. Keep away from children and pets. If not reused, dispose of in accordance with local environmental regulations.

Shut the engine OFF. Allow it to cool to 50°C [122°F], and drain the cooling system.

If the water being drained is still dirty, the system **must** be flushed again, until the drained water is clean.

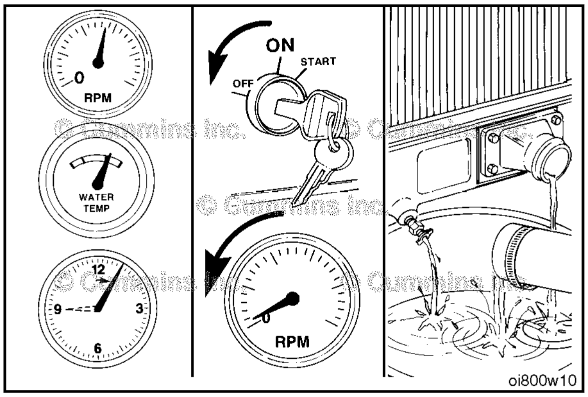

Vibration Damper, Rubber

Inspect for Reuse

Check the index lines (A) on the damper hub (B) and the inertia member (C). If the lines are more than 1.59 mm [1/16 in] out of alignment, replace the damper.

Inspect the vibration damper hub (B) for cracks. Replace the damper if the hub is cracked.

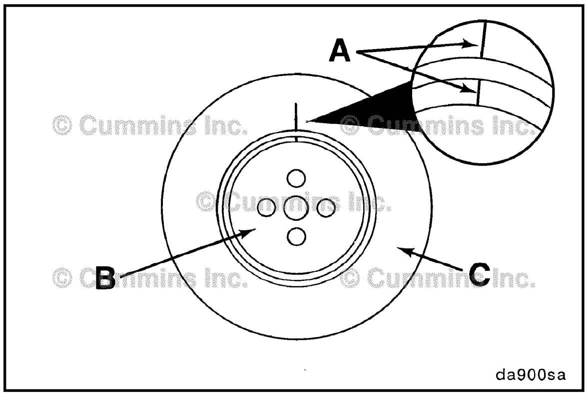

Inspect the rubber member for deterioration. If pieces of rubber are missing or if the elastic member is more than 3.18 mm [1/8 in] below the metal surface, replace the damper.

NOTE: Also look for forward movement of the damper ring on the hub. Replace the damper if any movement is detected.

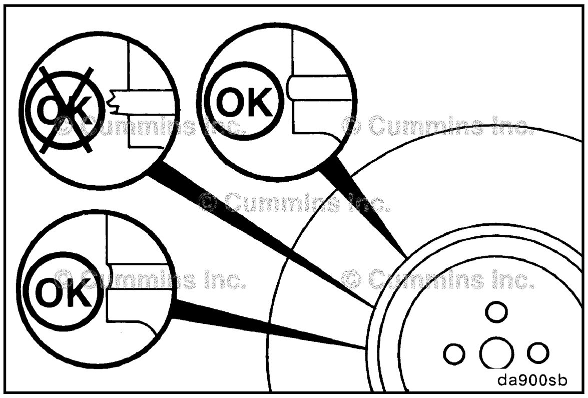

Downloaded from www.Manualslib.com manuals search engine

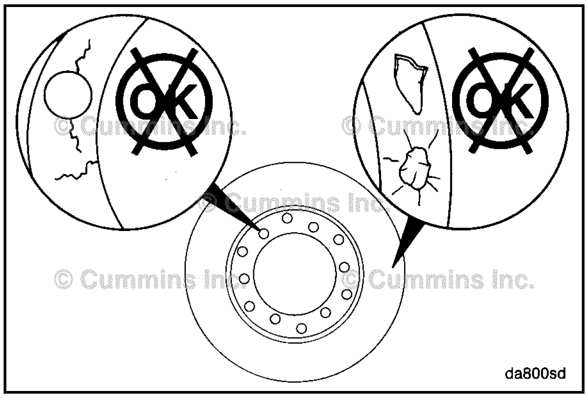

Vibration Damper, Viscous

Inspect

CAUTION

The silicone fluid in the vibration damper will become solid after extended service and will make the damper inoperative. An inoperative vibration damper can cause major engine or drivetrain failures.

Check the vibration damper for evidence of fluid loss, dents, and wobble. Inspect the vibration damper thickness for any deformation or raising of the damper cover plate.

If any of these conditions are identified, contact your local Cummins Authorized Repair Location to replace the vibration damper.

For vibration damper location, refer to Engine Diagrams in Engine Identification (Section E).

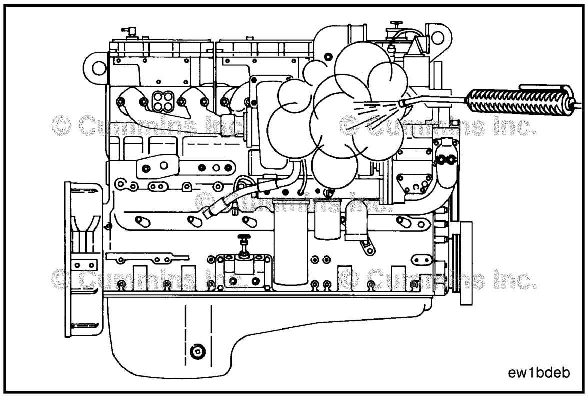

Engine Steam Cleaning

Clean

WARNING

When using a steam cleaner, wear safety glasses or a face shield, as well as protective clothing. Hot steam can cause serious personal injury.

Steam is the best method of cleaning a dirty engine or a piece of equipment. If steam is **not** available, use a solvent to wash the engine.

Protect all electrical components, openings, and wiring from the full force of the cleaner spray nozzle.

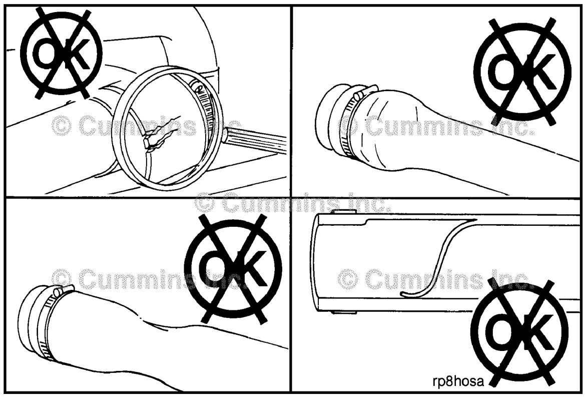

Radiator Hoses

Maintenance Check

Check all hoses for cracks, cuts, or collapsing.

NOTE: The silicone engine coolant hose will exhibit swelling due to the elasticity of the hose.

If damage is found, replace damaged hoses. Contact your local Cummins Authorized Repair Location.

Downloaded from www.Manualslib.com manuals search engine

Air Compressor Discharge Lines

General Information

All air compressors have a small amount of lubricating oil carryover that lubricates the piston rings and moving parts. When this lubricating oil is exposed to normal air compressor operating temperatures over time, the lubricating oil will form varnish or carbon deposits. If the following maintenance check are not performed, the air compressor piston rings will wear and not seal correctly.

Maintenance Check

WARNING

Wear appropriate eye and face protection when using compressed air. Flying debris and dirt can cause personal injury.

Shut off the engine.

Open the drain valve on the wet tank to release the system air pressure.

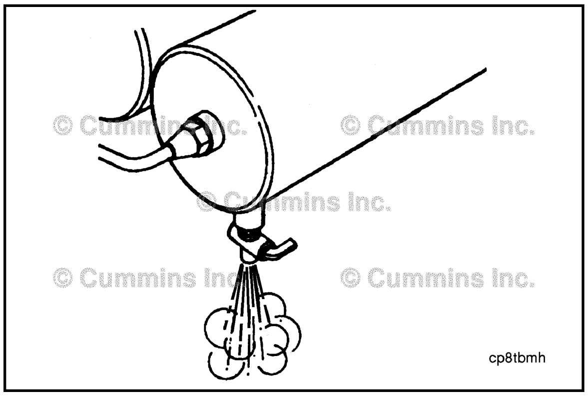

Remove the air compressor discharge line from the air compressor. Location of the air compressor discharge line can be found in Flow Diagram, Compressed Air System in System Diagrams (Section D).

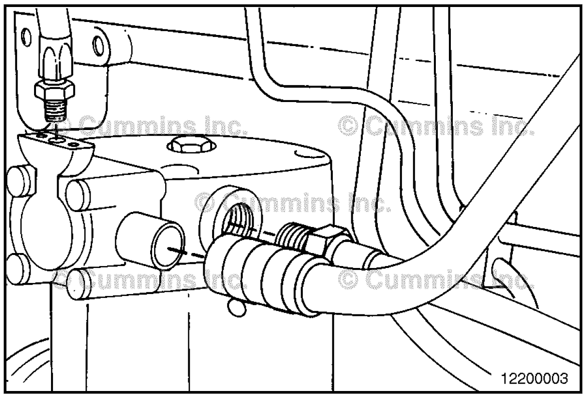

Measure the total carbon deposit thickness inside the air discharge line as shown. If the total carbon deposit (X + X) exceeds 2 mm [1/16 in], clean and inspect the cylinder head, the valve assembly, and the discharge line. Replace if necessary. Contact the Cummins Authorized Repair Location for procedures.

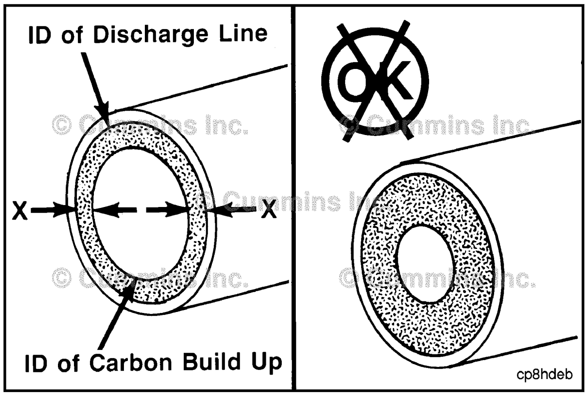

Downloaded from www.Manualslib.com manuals search engine

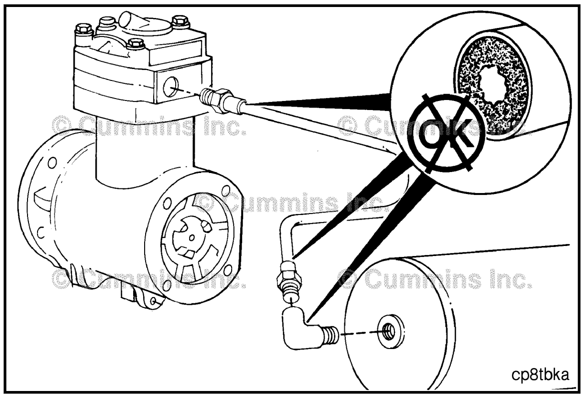

If the total carbon deposit exceeds specifications, continue checking the air discharge line connections up to the first tank until total carbon deposit is less than 2 mm [1/16 in]. Clean or replace any lines or connections that exceed this specification.

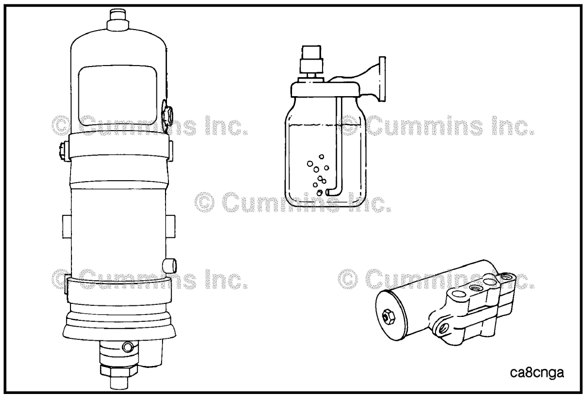

Inspect any air driers, splitter valves, pressure relief valves, and alcohol injectors for carbon deposits or malfunctioning parts. Inspect for air leaks. Maintain and repair the parts according to the manufacturer's specifications.

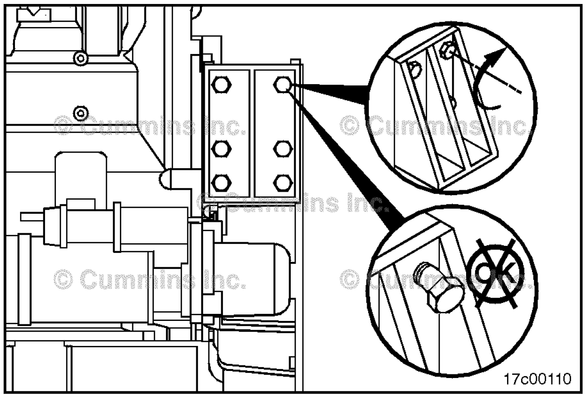

Engine Mounting Bolts

Maintenance Check

CAUTION

Damaged engine mounts and brackets can cause engine misalignment. Driveline component damage can result in vibration complaints.

Inspect all rubber-cushioned mounts for cracks or damage.

Inspect all mounting brackets for cracks or damaged bolt holes.

Check the torque on the engine-mounting nuts and bolts. Tighten any that are loose. Refer to the equipment manufacturer for torque specifications.

Downloaded from www.Manualslib.com manuals search engine

Section 8 - Maintenance Procedures at 5000 Hours or 4 Years

Section Contents

Page
Engine Brake 8-4
Adjust....8-4
Finishing Steps....8-8
Preparatory Steps....8-4
Maintenance Procedures - Overview 8-1
General Information....8-1
Overhead Set 8-1
Adjust....8-1
Finishing Steps....8-3
Preparatory Steps....8-1

Downloaded from www.Manualslib.com manuals search engine

This Page Left Intentionally Blank

Downloaded from www.Manualslib.com manuals search engine

Maintenance Procedures - Overview

General Information

All maintenance checks and inspections listed in previous maintenance intervals **must** also be performed at this time, in addition to those listed under this maintenance interval.

Overhead Set

Preparatory Steps

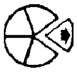

Remove the crankcase breather tube, rocker lever cover mounted breather **only**.

Remove the variable geometry turbocharger actuator air supply line, if equipped.

Remove the capscrews.

Remove the rocker lever cover and gasket.

NOTE: Rocker lever cover configurations will be different based upon if the cover is center bolted or perimeter bolted. The rocker lever cover can also be taller if the engine is equipped with engine brakes.

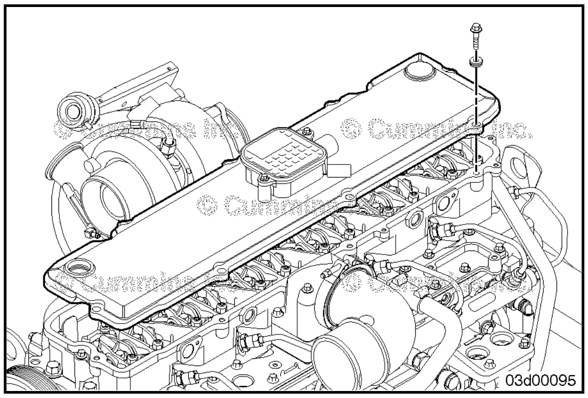

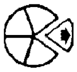

Remove the plastic fuel pump drive cover located on the front of the engine.

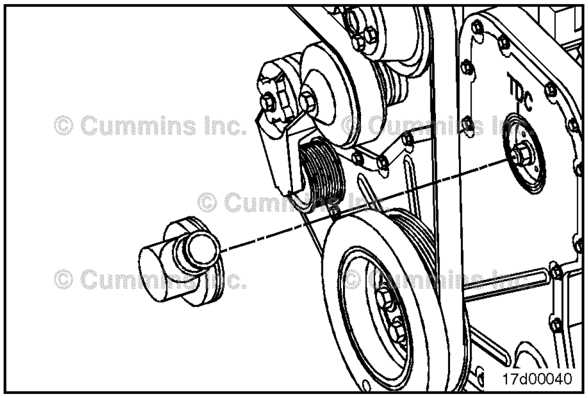

Adjust

CAUTION

Engine coolant temperature should be less than 60°C [140°F].

Use barring tool, Part Number 3824591, or equivalent. Rotate the crankshaft to align the top dead center marks on the gear cover and the fuel pump gear.

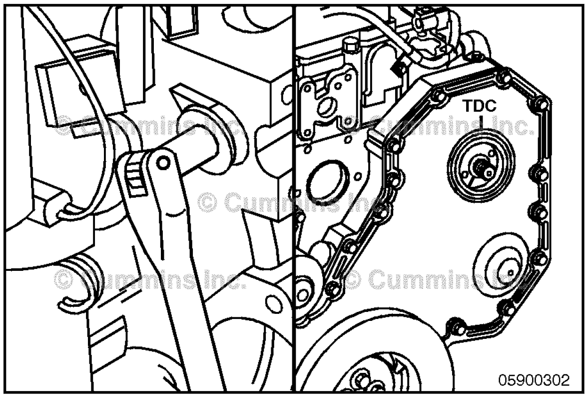

Downloaded from www.Manualslib.com manuals search engine

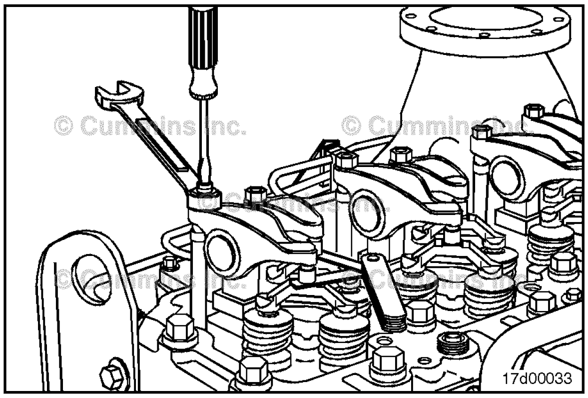

With the engine in this position, lash can be checked on the following rocker arms: 1I, 1E, 2I, 3E, 4I, and 5E.

Lash Check Limits			
	mm		in
Intake	0.152	MIN	0.006
	0.559	MAX	0.022
Exhaust	0.381	MIN	0.015
	0.813	MAX	0.032

NOTE: Lash checks are performed as part of a troubleshooting procedure, and resetting is **not** required during checks as long as the lash measurements are within the above limits.

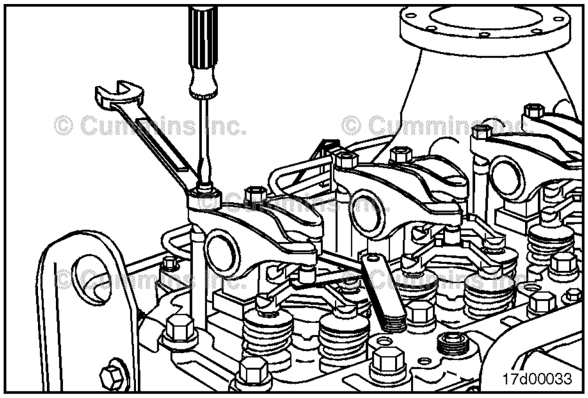

Measure lash by inserting a feeler gauge between the crosshead and the rocker lever ball insert and socket while lifting up on the end of the rocker arm. If the lash measurement is out of specification, loosen the locknut and adjust the lash to the nominal specification.

Lash Reset Specifications			
	mm		in
Intake	0.305	NOM	0.012
Exhaust	0.559	NOM	0.022

NOTE: Lash resets are **only** required at the interval specified in the Maintenance Schedule, when lash is measured and found out of specification, or when engine repairs cause removal of the rocker arms and/or loosening of the adjusting screws.

Tighten the locknut and measure again.

Torque Value: 24 N•m [212 in-lb]

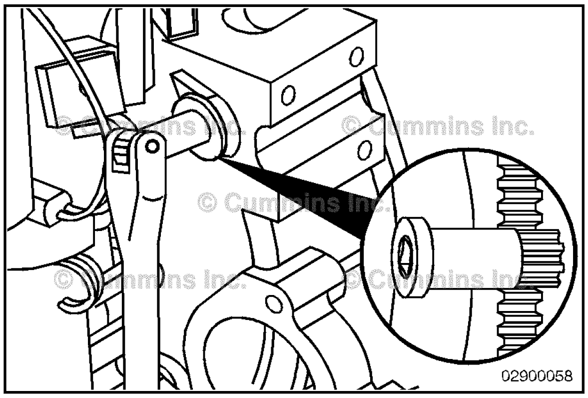

Use the barring tool, Part Number 3824591, or equivalent, and rotate the crankshaft 360 degrees and measure lash for rocker arms 2E, 3I, 4E, 5I, 6I, and 6E. Reset the lash, if out of specification.

Downloaded from www.Manualslib.com manuals search engine

Finishing Steps

Center Bolted Rocker Lever Cover

Place the gasket on the cylinder head. Be sure the gasket is properly aligned around the cylinder head capscrews.

Install the rocker lever cover and capscrews.

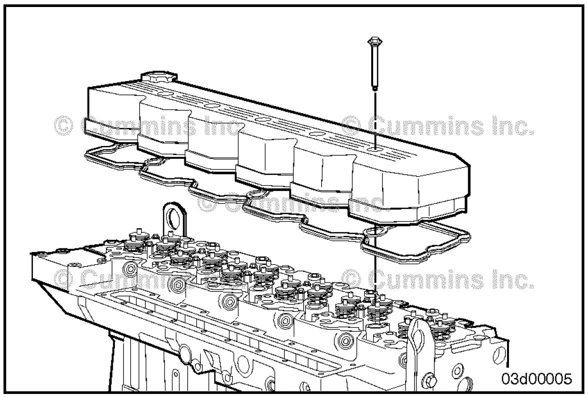

Tighten the capscrews.

Torque Value: 12 N•m [106 in-lb]

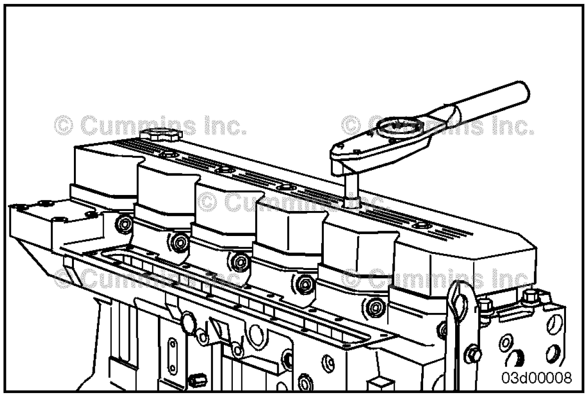

Perimeter Bolted Rocker Lever Cover

NOTE: If the gasket has been removed from the rocker lever cover, a new gasket **must** be used.

The following installation procedure **must** be used when installing the press-in gasket.

1. Press the molded gasket into the corners of the rocker lever cover.
2. Press the gasket around the capscrew mounting holes.
3. Press the remaining gasket into the rocker lever cover.

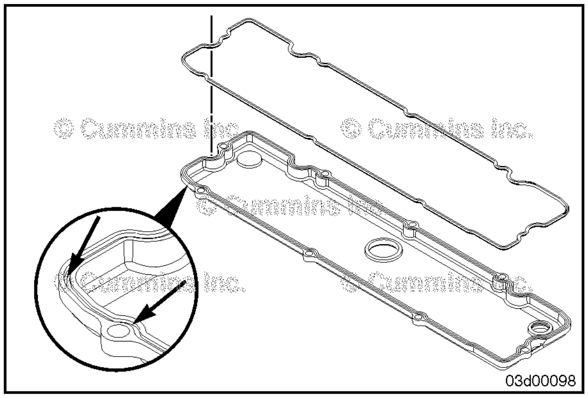

Install the rocker lever cover and capscrews.

Torque Value: 12 N•m [106 in-lb]

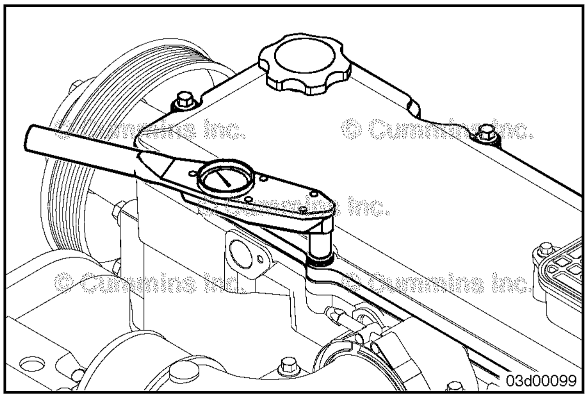

Downloaded from www.Manualslib.com manuals search engine

Install the crankcase breather tube, rocker lever cover mounted breather **only**.

Install the variable geometry turbocharger actuator air supply line, if equipped.

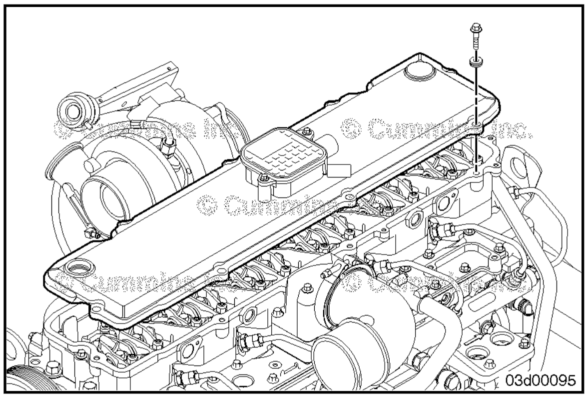

Engine Brake

Preparatory Steps

Remove the crankcase breather tube, rocker lever cover mounted breather **only.**

Remove the variable geometry turbocharger actuator air supply line, if equipped.

Remove the capscrews.

Remove the rocker lever cover and gasket.

NOTE: Rocker lever cover configurations will be different based upon if the cover is center bolted or perimeter bolted. The rocker lever cover can also be taller if the engine is equipped with engine brakes.

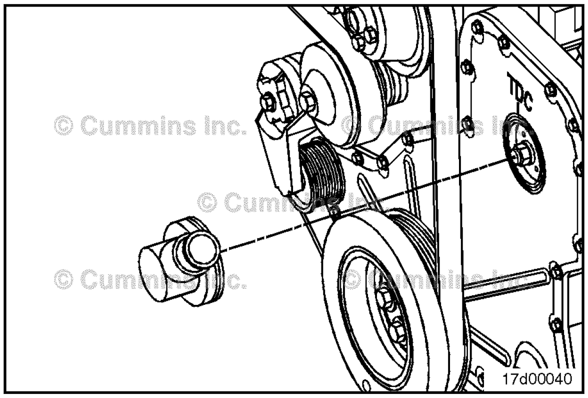

Remove the plastic fuel pump drive cover located on the front of the engine.

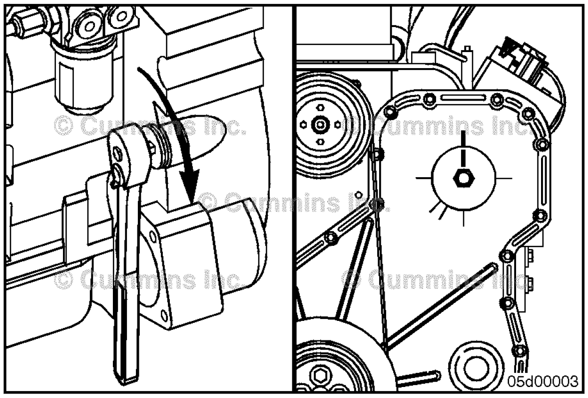

Adjust

Using the barring tool, Part Number 3824591, rotate the crankshaft to align the mark on the fuel pump gear with the top dead center mark on the gear cover.

Downloaded from www.Manualslib.com manuals search engine

When the engine is in the top dead center position, brake lash can be set on cylinders 1, 3, and 5.

Using two wrenches, hold the adjusting nut and loosen the lock nuts on the brake at cylinders 1, 3, and 5.

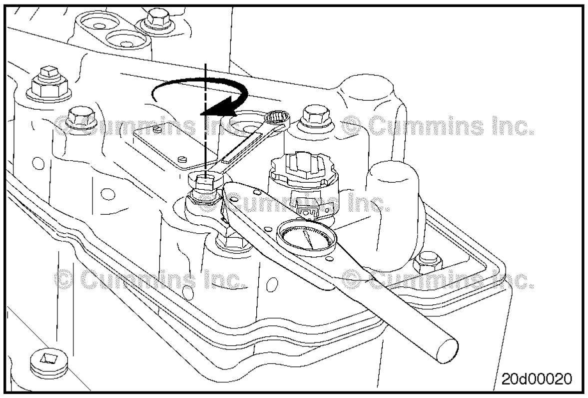

Brake Lash - Feeler Gauge Method

Insert the appropriate brake lash feeler gauge between the brake slave piston and exhaust crosshead pin on cylinder number 1.

Brake Lash - Feeler Gauge	
Tool Part No.	**Lash Specification**
3163681	2.286 mm [0.090 in]

NOTE: If the correct size feeler gauge is **not** available, there is an alternate dial indicator method for setting the brake lash following in this procedure.

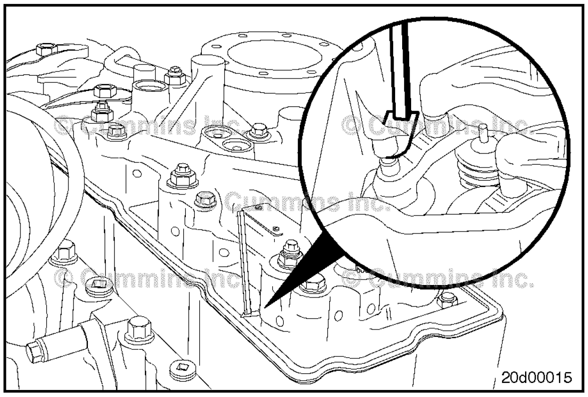

Using the 6 in-lb torque wrench, Part Number 3376592, tighten the adjusting nut until the torque wrench “clicks,” or until drag is felt on the feeler gauge.

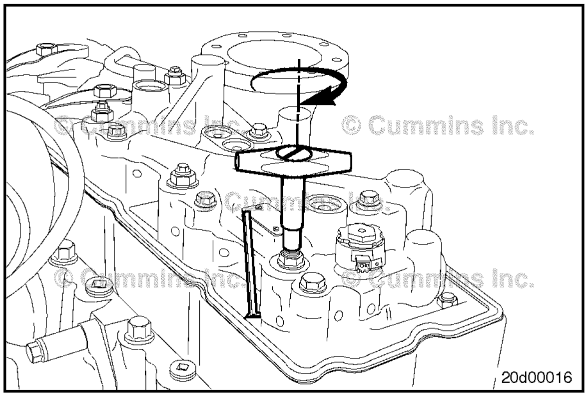

Remove the feeler gauge. Using two wrenches, hold the adjusting nut and tighten the locknut.

Torque Value: 35 N•m [25 ft-lb]

Repeat for cylinders 3 and 5.

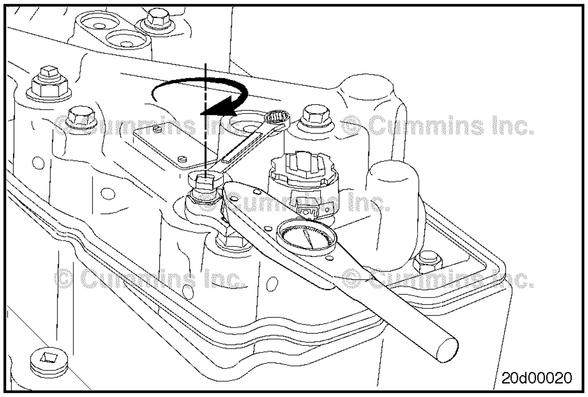

Downloaded from www.Manualslib.com manuals search engine

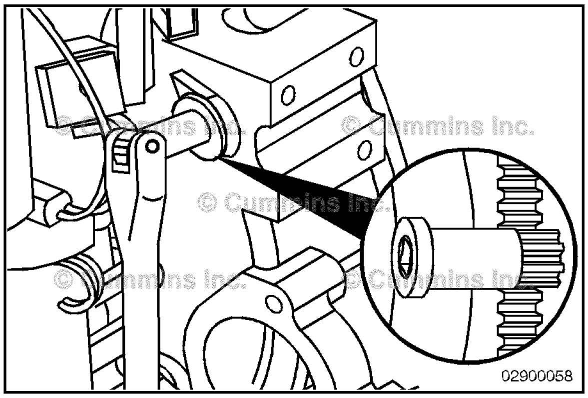

Using the engine barring tool, Part Number 3824591, rotate the crankshaft 360 degrees to align the mark on the fuel pump gear with the mark on the gear cover that is 180 degrees away from top dead center.

When the engine is in position, brake lash can be set on cylinders 2, 4, and 6.

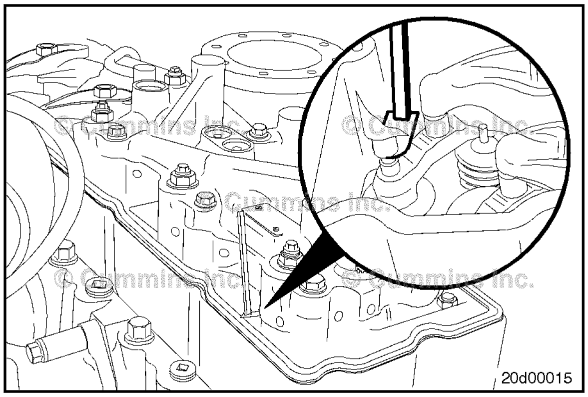

Insert the appropriate brake lash feeler gauge between the brake the brake sleeve piston and the exhaust crosshead pin on cylinder number 2.

Brake Lash - Feeler Gauge	
Tool Part No.	**Lash Specification**
3163681	2.286 mm [0.090 in]

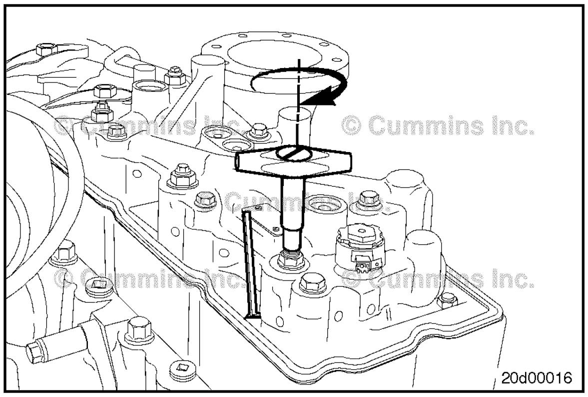

Using the 6 in-lb torque wrench, Part Number 3376592, tighten the adjusting nut until the torque wrench “clicks,” or until drag is felt on the feeler gauge.

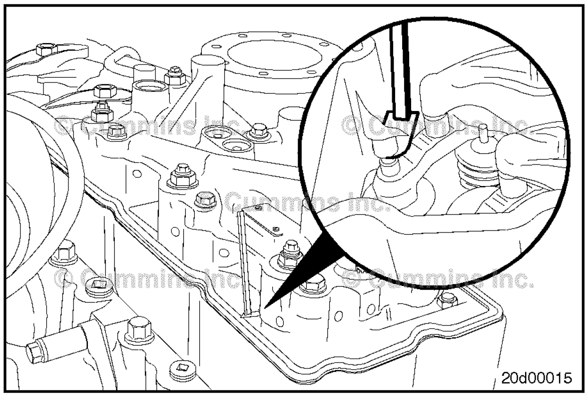

Remove the feeler gauge. Using two wrenches, hold the adjusting nut and tighten the locknut.

Torque Value: 35 N•m [25 ft-lb]

Repeat for cylinders 4 and 6.

Downloaded from www.Manualslib.com manuals search engine

The following method can be used instead of the feeler gauge method if a feeler gauge of the proper size is **not** available.

Using the barring tool, Part Number 3824591, rotate the crankshaft to align the mark on the fuel pump gear with the top dead center mark on the gear cover.

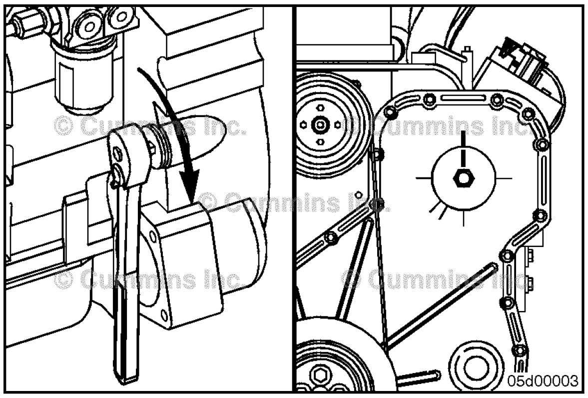

Brake Lash - Dial Indicator

Tighten the backlash adjusting nut on cylinder 1 until resistance is felt. Place the dial indicator tip on the adjusting nut and zero the dial indicator. Turn the lash adjusting nut in a **counterclockwise** direction until the appropriate lash is reached.

Measurements

	mm	in
Brake Lash Specification	2.286	0.090

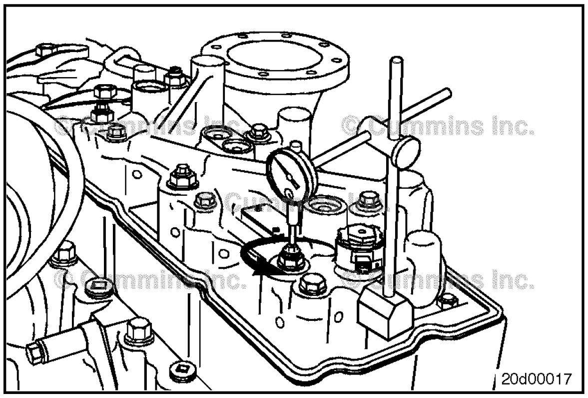

Using two wrenches, hold the adjusting nut and tighten the locknut.

Torque Value: 35 N•m [25 ft-lb]

Repeat for cylinders 3 and 5.

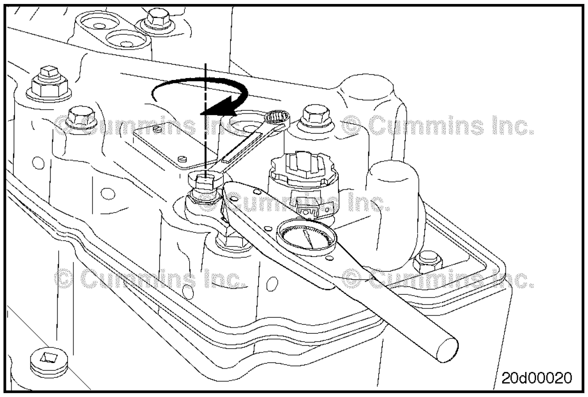

Using the engine barring tool, Part Number 3824591, rotate the crankshaft 360 degrees to align the mark on the fuel pump gear with the mark on the gear cover that is 180 degrees away from top dead center.

When the engine is in position, brake lash can be set on cylinders 2, 4, and 6.

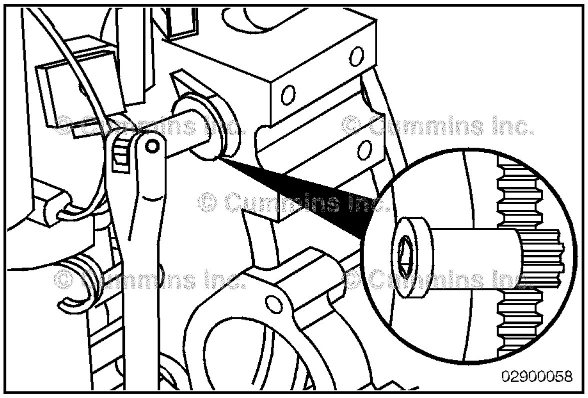

Downloaded from www.Manualslib.com manuals search engine

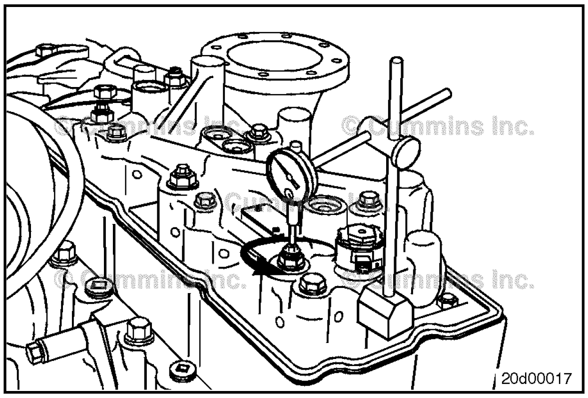

Brake Lash - Dial Indicator

Tighten the backlash adjusting nut on cylinder 2 until resistance is felt. Place the dial indicator tip on the adjusting nut and zero the dial indicator. Turn the lash adjusting nut in a **counterclockwise** direction until the appropriate lash is reached.

Measurements

	mm	in
Brake Lash Specification	2.286	0.090

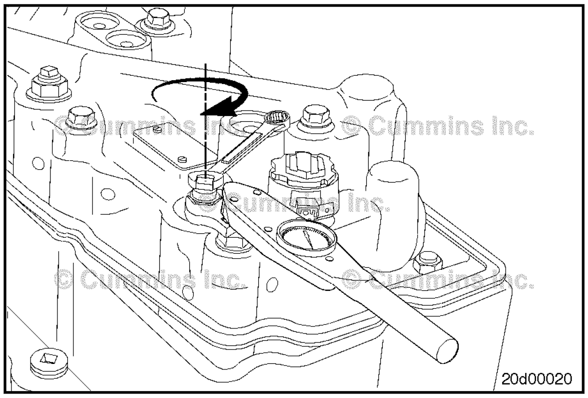

Using two wrenches, hold the adjusting nut and tighten the locknut.

Torque Value: 35 N•m [25 ft-lb]

Repeat for cylinders 4 and 6.

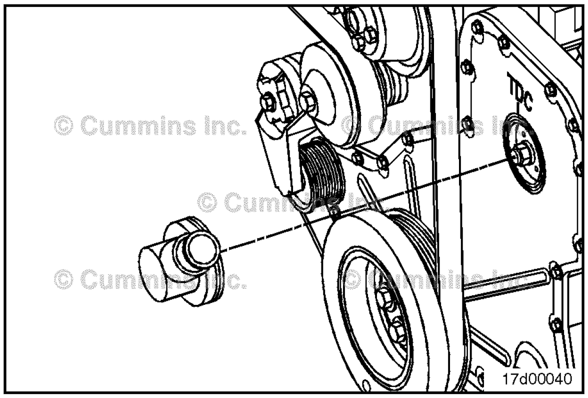

Finishing Steps

Center Bolted Rocker Lever Cover

Install the plastic fuel pump drive cover located on the front of the engine

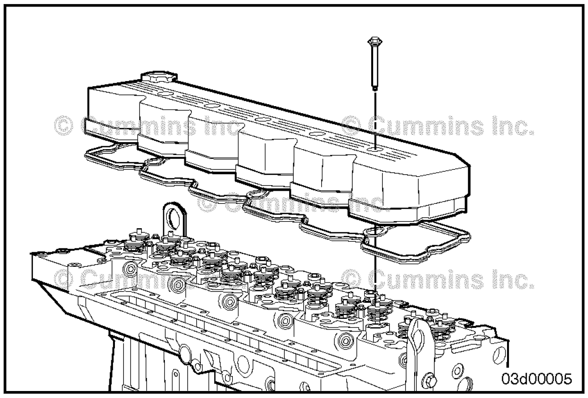

Place the gasket on the cylinder head. Be sure the gasket is properly aligned around the cylinder head capscrews.

Install the rocker lever cover and capscrews.

Downloaded from www.Manualslib.com manuals search engine

Tighten the capscrews.

Torque Value: 12 N•m [106 in-lb]

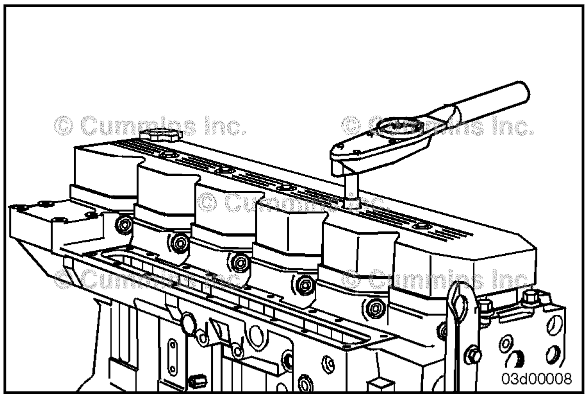

Perimeter Bolted Rocker Lever Cover

NOTE: If the gasket has been removed from the rocker lever cover, a new gasket **must** be used.

The following installation procedure **must** be used when installing the press-in gasket.

1 Press the molded gasket into the corners of the rocker lever cover.

2 Press the gasket around the capscrew mounting holes.

3 Press the remaining gasket into the rocker lever cover.

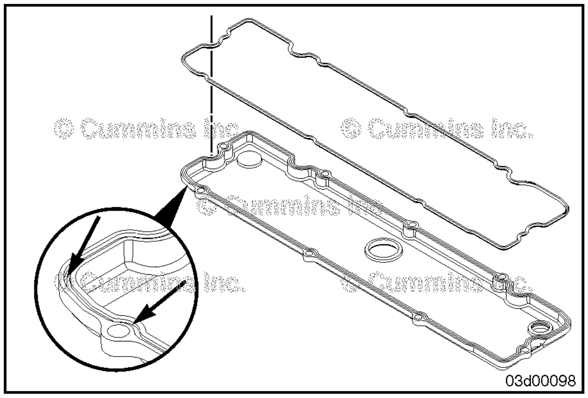

Install the rocker lever cover and capscrews.

Torque Value: 12 N•m [106 in-lb]

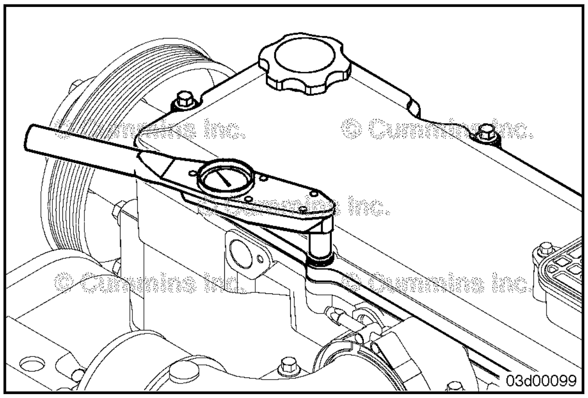

Install the crankcase breather tube, rocker lever cover mounted breather **only**.

Install the variable geometry turbocharger actuator air supply line, if equipped.

Downloaded from www.Manualslib.com manuals search engine

Notes

Downloaded from www.Manualslib.com manuals search engine

Section A - Adjustment, Repair, and Replacement

Section Contents

Page

Alternator A-4
Preparatory Steps....... A-4
Belt Tensioner, Automatic (Water Pump) A-2
Initial Check....... A-2
Charge-Air Cooler A-4
Leak Test....... A-6
Pressure Test....... A-4
Temperature Differential Test....... A-7
Drive Belt, Alternator A-4
Install....... A-4
Remove....... A-4
Drive Belt, Cooling Fan A-2
Install....... A-2
Remove....... A-2
Lubricating Oil Dipstick A-1
Calibrate....... A-1
Starting Motor A-8
Clean and Inspect for Reuse....... A-10
Finishing Steps....... A-11
Cummins Branded Starters....... A-11
Non-Cummins Branded Starters....... A-12
Install....... A-11
Measure....... A-11
Preparatory Steps....... A-9
Remove....... A-10
Rotation Check....... A-8

Downloaded from www.Manualslib.com manuals search engine

This Page Left Intentionally Blank

Downloaded from www.Manualslib.com manuals search engine

Lubricating Oil Dipstick

Calibrate

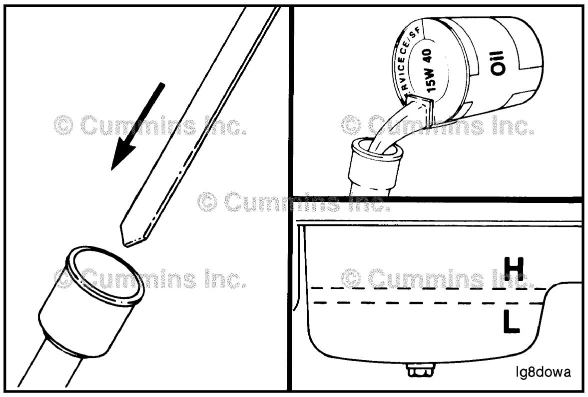

⚠WARNING⚠

Some state and federal agencies have determined that used engine oil can be carcinogenic and can cause reproductive toxicity. Avoid inhalation of vapors, ingestion, and prolonged contact with used engine oil. If not reused, dispose of in accordance with local environmental regulations.

⚠WARNING⚠

To reduce the possibility of personal injury, avoid direct contact of hot oil with your skin.

Install the dipstick in the dipstick tube housing.

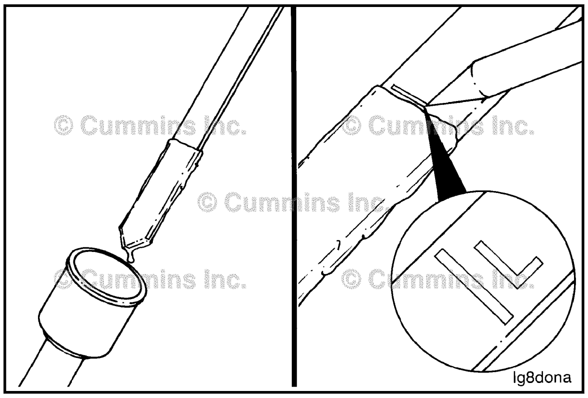

⚠CAUTION⚠

Use care when marking the dipstick. The dipstick will break if the scribe mark is too deep.

Remove the dipstick and scribe a mark across the stick at the oil level. Label the mark with an L to indicate the "LOW" oil level.

NOTE: If a new blank dipstick is being used, cut the dipstick off approximately 38 mm [1.5 in] below the LOW oil level mark.

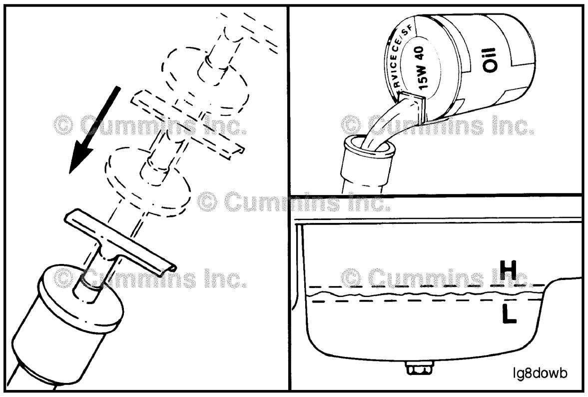

Wipe off the dipstick and install it in the dipstick tube housing.

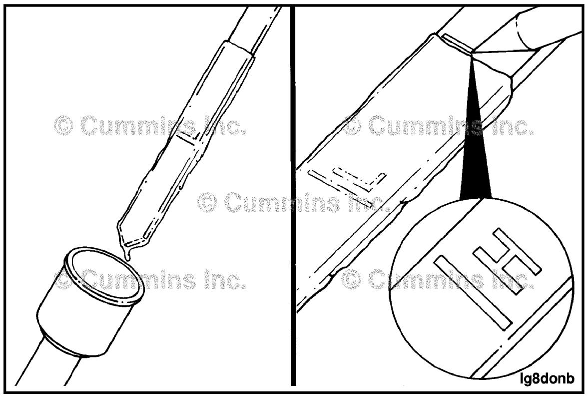

⚠CAUTION⚠

Use care when marking the dipstick. The dipstick will break if the scribe mark is too deep.

Remove the dipstick and scribe a mark across the stick at the oil level. Label the mark with an H to indicate the HIGH oil level.

Downloaded from www.Manualslib.com manuals search engine

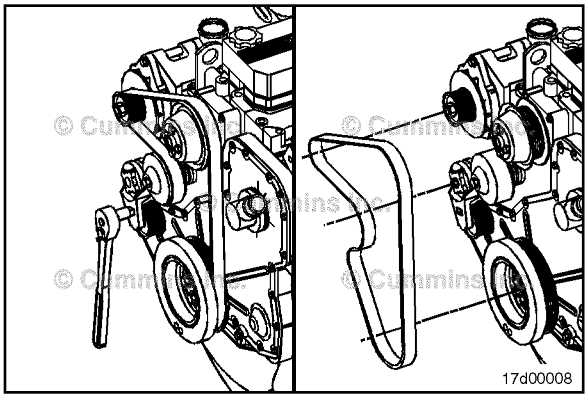

Drive Belt, Cooling Fan

Remove

Lift the tensioner to remove the drive belt.

NOTE: The belt tensioner is spring-loaded and **must** be pivoted away from the drive belt. Pivoting in the wrong direction can result in damage to the belt tensioner.

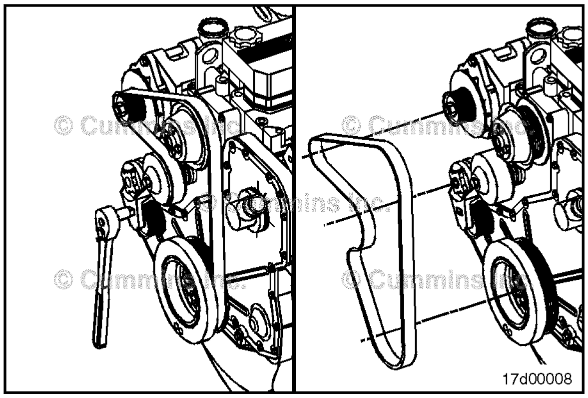

Install

Lift and hold the belt tensioner. Install the drive belt and release the tensioner.

NOTE: The belt tensioner is spring-loaded and **must** be pivoted away from the drive belt. Pivoting in the wrong direction can result in damage to the belt tensioner.

Service Tip: If difficulty is experienced installing the drive belt (i.e., the belt seems too short), position the belt over the grooved pulleys first then while holding the tensioner up, slide the belt over the water pump pulley.

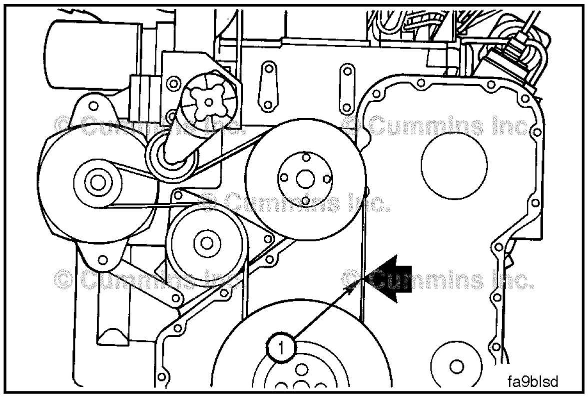

Belt Tensioner, Automatic (Water Pump)

Initial Check

Check the belt deflection at the longest span of the belt. The deflection **must** be checked at the center (1) of the span.

The maximum deflection allowed in the belt is 9.5 to 12.7 mm [3/8 to 1/2-in].

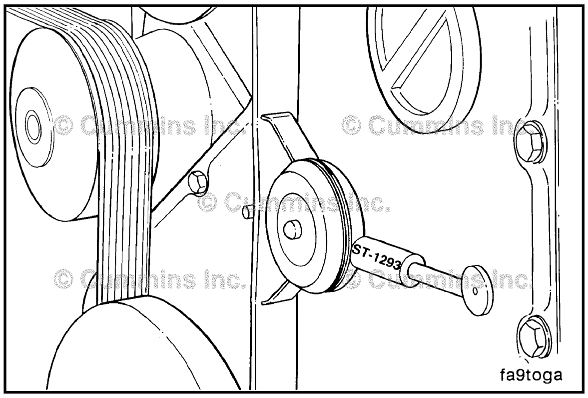

Use belt tensioner gauge, Part Number ST-1293, to measure the tension in the drive belt.

Belt Tension

N		lbf
356	MIN	80
534	MAX	120

If the measurement is out of the specified range, replace **only** the belt and perform the tension test again. If the measurement is still outside of the specified rang after the new belt has been installed, replace the belt tensioner.

Downloaded from www.Manualslib.com manuals search engine

Check the tensioner arm, pulley, and stops for cracks. If any cracks are observed, the tensioner **must** be replaced.

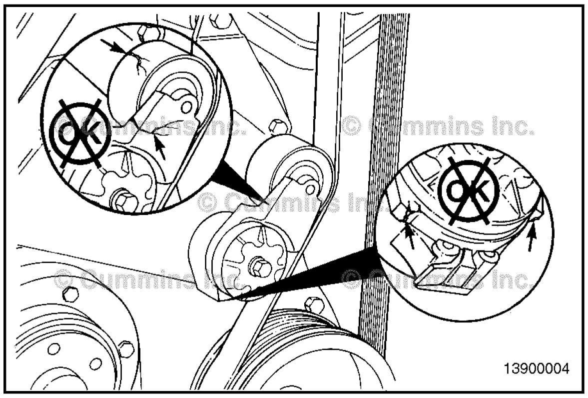

With the belt installed, verify that neither tensioner arm stop is in contact with the spring casing stop. If either stop is touching, replace the drive belt. Refer to Procedure 008-002 in Section 8.

After replacing the belt, if the tensioner arm stops are still in contact with the spring case stop, replace the tensioner.

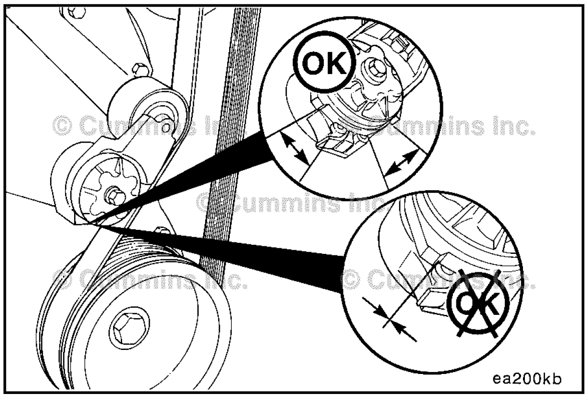

Check the location of the drive belt on the belt tensioner pulley. The belt **must** be centered on, or close to the middle of, the pulley. Misaligned belts, either too far forward or backward, can cause belt wear, belt roll-off failures, or increase uneven tensioner bushing wear.

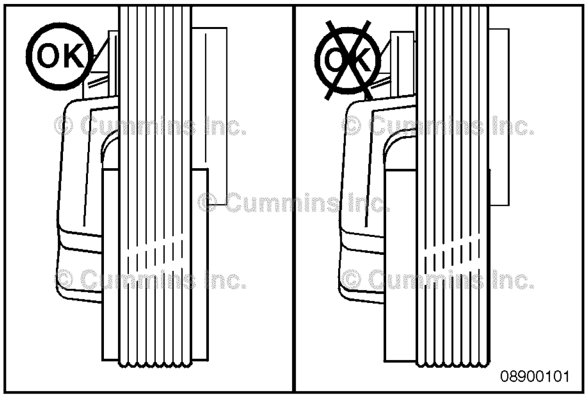

Remove the drive belt. Refer to Procedure 008-002 in Section 8.

With the belt removed, verify that the tensioner arm stop is in contact with the spring case stop. If they are **not** touching, the tensioner **must** be replaced.

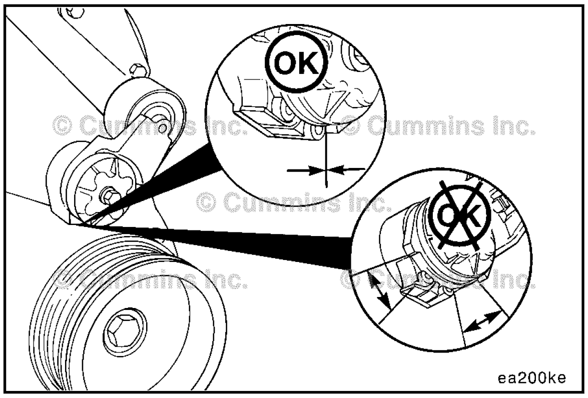

Downloaded from www.Manualslib.com manuals search engine

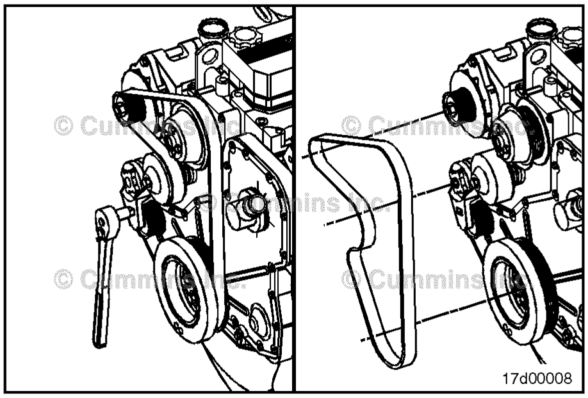

Drive Belt, Alternator

Remove

Lift the belt tensioner to relieve tension on the belt and remove the drive belt.

Refer to Procedure 008-002.

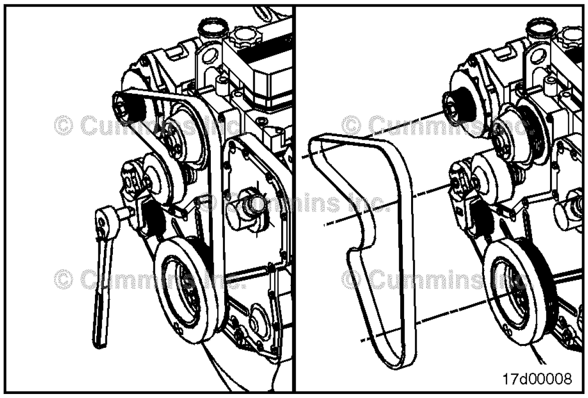

Install

NOTE: If difficulty is experienced installing the drive belt (i.e., the belt seems too short), position the belt over the grooved pulleys first and then, while holding the tensioner up, slide the belt over the water pump pulley.

Lift and hold the belt tensioner. Install the drive belt and release the tensioner.

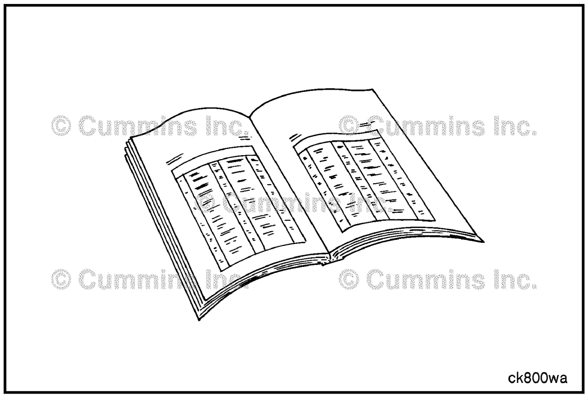

Alternator

Preparatory Steps

WARNING

Batteries can emit explosive gases. To reduce the possibility of personal injury, always ventilate the compartment before servicing the batteries. To reduce the possibility of arcing, remove the negative (-) battery cable first and attach the negative (-) battery cable last.

Remove and tag all wires and complete the following steps:

- Disconnect the ground cable from the battery terminal.

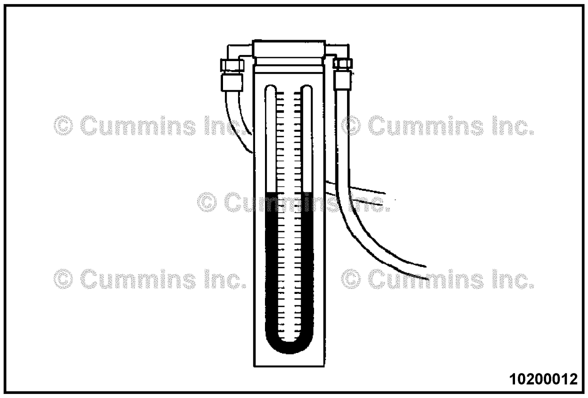

Charge-Air Cooler

Pressure Test

Mercury Manometer, Part Number ST-1111-3

Preferred Method

Measure the charge air cooler system pressure drop with a mercury manometer.

Downloaded from www.Manualslib.com manuals search engine

Install one end of a mercury manometer, Part Number ST-1111-3, in the 1/8-inch fitting in the turbocharger compressor outlet elbow.

Install the other end of the mercury manometer in the intake manifold.

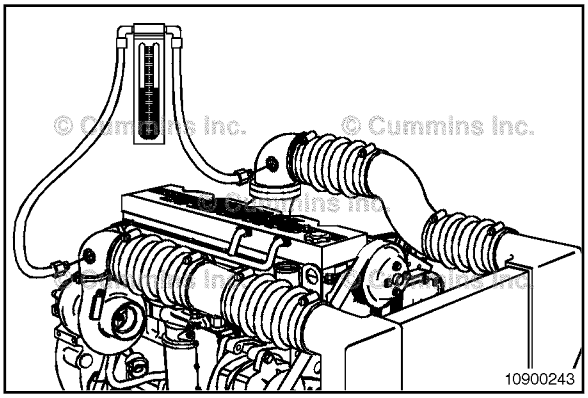

Operate the engine at rated rpm and load. Record the readings on the manometer.

If the differential pressure is greater than 152 mm Hg [6 in Hg], check the charge air cooler and associated piping for plugging, restrictions, or damage.

Clean or replace, if necessary.

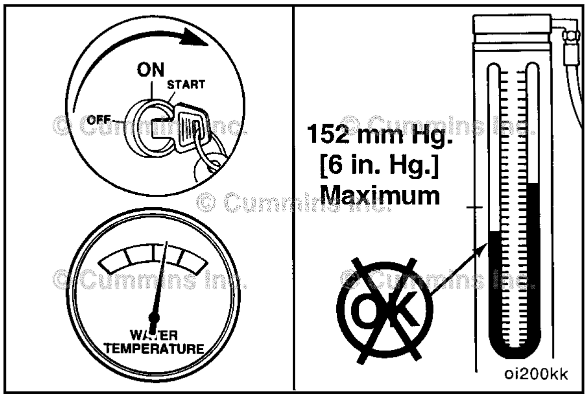

Pressure Gauge, Part Number ST-1273

Optional Method

Obtain two pressure gauges, Part Number ST-1273. Check both gauges on the same pressure source at 206 kPa [30 psi] to maintain consistency.

Install one pressure gauge in the 1/8-inch fitting in the turbocharger compressor outlet elbow.

Install the other pressure gauge in the intake manifold.

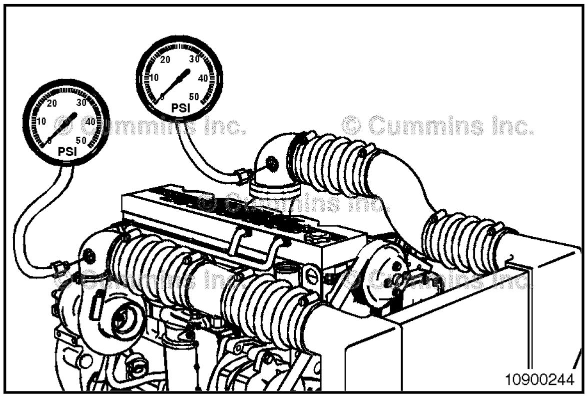

Operate the engine at rated rpm and load. Record the readings on the two gauges.

If the differential pressure is greater than 152 mm Hg [6 in Hg], check the charge air cooler and associated piping for plugging, restrictions, or damage.

Clean or replace, if necessary.

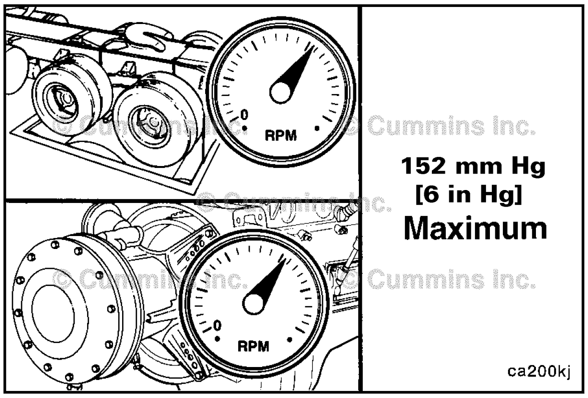

Downloaded from www.Manualslib.com manuals search engine

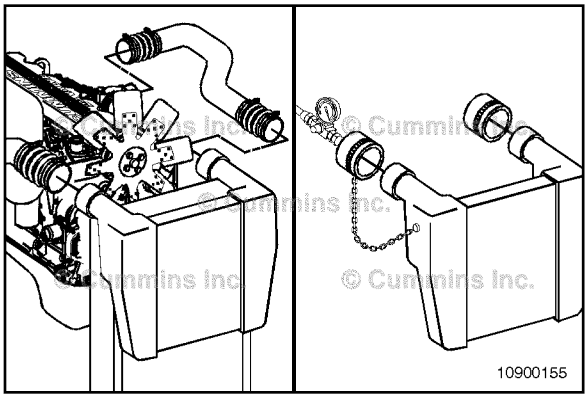

Leak Test

WARNING

To prevent possible injury if either plug blows off during the test, secure safety chains on the test plugs to any convenient capscrew on the radiator assembly. This test must be performed with securely fastened safety chains.

To check the charge air cooler for cracked tubes or header, remove the inlet and outlet hoses from the cooler. The charge air cooler does **not** have to be removed from the chassis.

Install a plug or cap over the outlet side of the cooler. Install a pressure gauge and a regulated shop air supply line with a shutoff valve to the inlet side of the cooler.

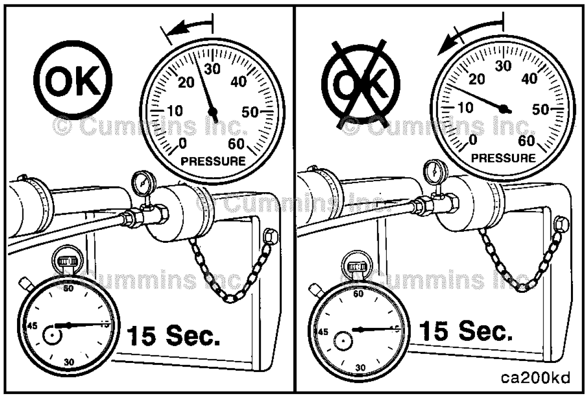

Apply air pressure to the cooler until the pressure gauge reads a steady 207 kPa [30 psi] of air pressure.

Shutoff the air flow to the cooler, and start a stopwatch at the same time. Record the leakage at 15 seconds.

If the pressure drop is 48 kPa [7 psi] or less in 15 seconds, the cooler is operational.

If the pressure drop is greater than 48 kPa [7 psi] in 15 seconds, check all connections again.

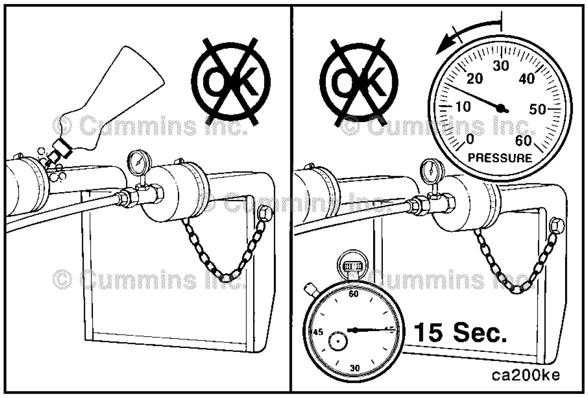

Determine if the pressure drop is caused by a leak in the charge air cooler or by a leaky connection. Use a spray bottle filled with soapy water applied to all hose connections, and watch for bubbles to appear at the location of the leak.

If the pressure drop is caused by a leaky connection, repair the connection, and repeat the test. If the leak is within the charge air cooler, repeat the test to verify the accuracy of the pressure drop measurement. Similar pressure drop readings **must** be obtained at least three consecutive tests before the reading can be considered accurate.

NOTE: If a charge air cooler leaks more than 48 kPa [7 psi] in 15 seconds, it will appear as a major leak in a leak tank.

Downloaded from www.Manualslib.com manuals search engine

If the pressure drop is greater than 48 kPa [7 psi] in 15 seconds, the charge air cooler **must** be replaced.

Refer to the equipment manufacturer's service manual for replacement instructions.

NOTE: Charge air coolers are **not** designed to be 100-percent leak-free. If the pressure drop is less than 48 kPa [7 psi] in 15 seconds, then the charge air cooler does **not** need to be replaced.

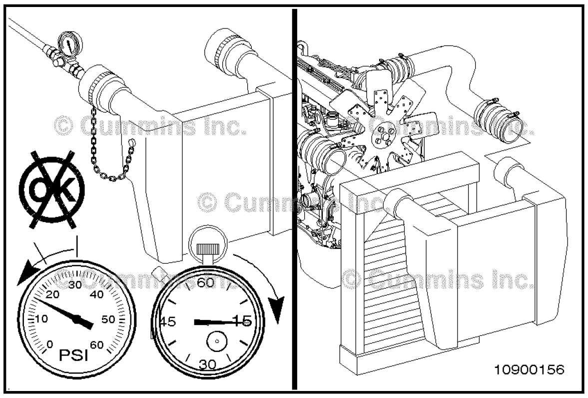

Temperature Differential Test

Inspect the charge air cooler fins for obstructions to air flow. Remove obstructions such as a winterfront or debris. Manually lock shutters in the OPEN position, if equipped.

Lock the fan drive in the ON mode to prevent erratic test results. This can be done by installing a jumper wire across the temperature switch.

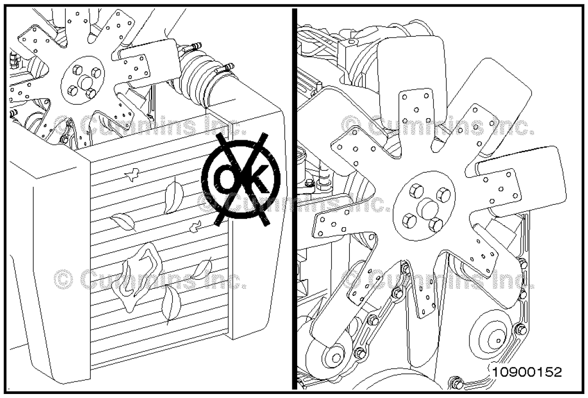

Install fluke digital thermometer, Part Number 3822666, into the intake manifold at the 1/8-inch NPT tap near the air horn connection with the intake manifold.

Another alternative is to use the monitor mode on the INSITE™ electronic service tool.

Install another thermocouple at the air cleaner inlet to measure ambient air temperature.

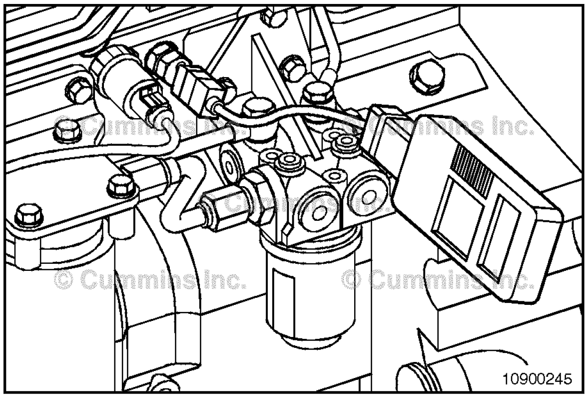

Perform a road test with the engine at peak power and a vehicle speed of 48 kph [30 mph] or greater.

Record the intake manifold temperature and the ambient air temperature.

Calculate the differential temperature:

- Intake Manifold Temperature minus Ambient Air Temperature equals Differential Temperature
- Maximum Differential Temperature equals 28°C [50°F].

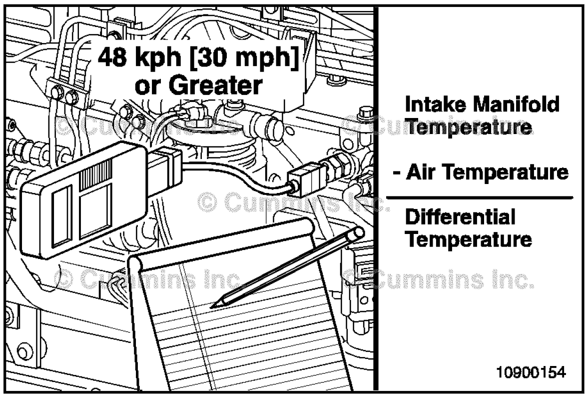

Downloaded from www.Manualslib.com manuals search engine

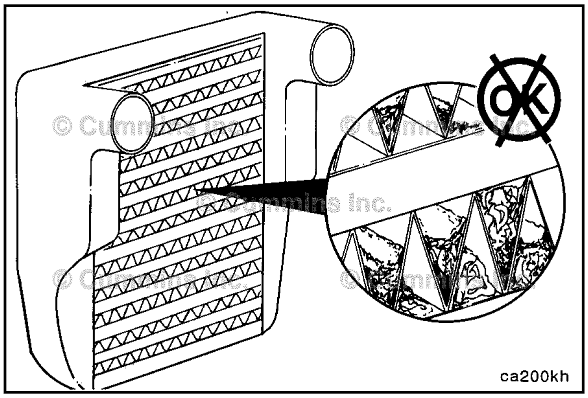

If the temperature differential is greater than the specifications, check the charge air cooler for dirt and debris on the fins and clean as necessary. If the problem still exists, check the charge air cooler for debris in the fins or between the charge air cooler and radiator. Confirm full fan engagement.

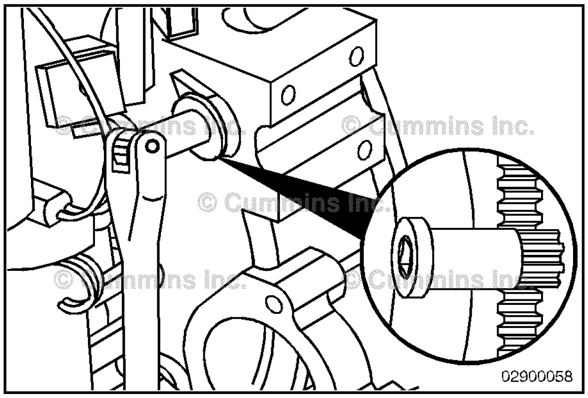

Starting Motor

Rotation Check

If the starting motor solenoid is making a sound but the engine is **not** rotating, turn the keyswitch to the OFF position, and attempt to bar the crankshaft in both directions.

Bar the engine using the barring tool, Part Number 3824591.

If the crankshaft will bar over, attempt to start the engine. If the starting motor cranks the engine, check the starting motor pinion gear and flywheel ring gear for damage.

If damage to the starting motor pinion gear and/or flywheel ring gear is found when replacing the components, make sure to measure the distance from the starting motor mounting flange to the forward face of the front side of the flywheel ring gear. Follow the measure step of this procedure .

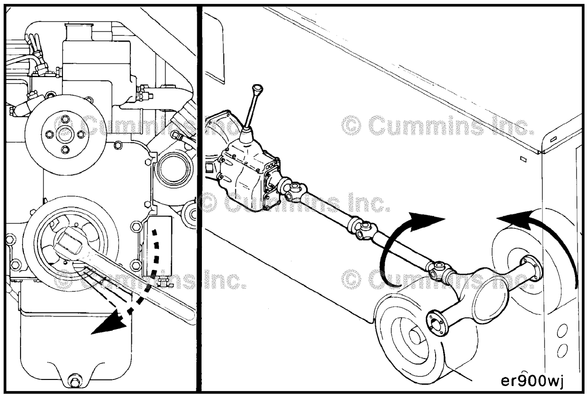

If the crankshaft does **not** rotate or requires more than the normal effort to bar, check for an internal malfunction or a problem with the drive unit and/or accessories.

Downloaded from www.Manualslib.com manuals search engine

If the engine cranking speed is too slow or will **not** crank at all, and the engine rotates freely:

- make sure the wiring connections are clean, tight and **not** damaged
- check the battery voltage. Refer to Procedure 013-007.

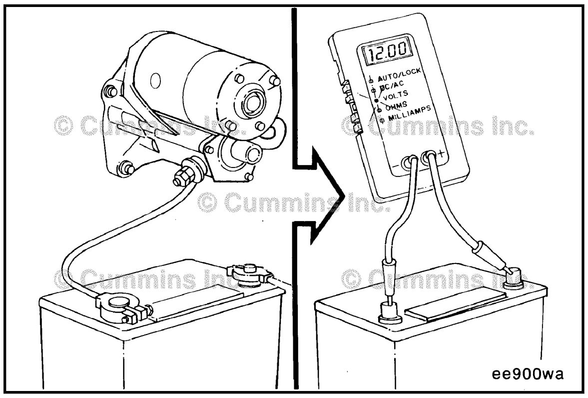

Check the voltage at the starting motor during cranking. If the voltage drops more than 2.4 VDC on a 12-VDC system, or 4.8 VDC on a 24-VDC system, check that all connections are clean and tight.

If the cables are correct and the voltage drop exceeds the limit, replace the starting motor.

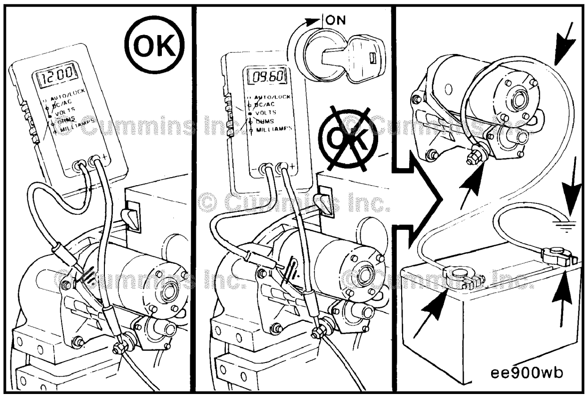

Preparatory Steps

WARNING

Batteries can emit explosive gases. To reduce the possibility of personal injury, always ventilate the compartment before servicing the batteries. To reduce the possibility of arcing, remove the negative (-) battery cable first and attach the negative (-) battery cable last.

Disconnect the battery cables from the battery terminals. Refer to Procedure 013-009.

Identify each wire with a tag indicating its location on the starting motor.

Remove the electrical connections from the starting motor.

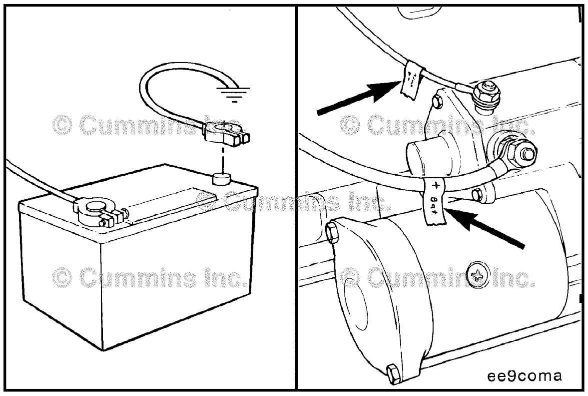

Downloaded from www.Manualslib.com manuals search engine

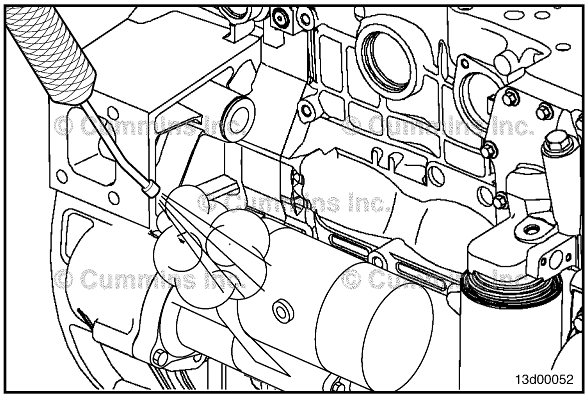

⚠WARNING⚠

When using a steam cleaner, wear safety glasses or a face shield, as well as protective clothing. Hot steam can cause serious personal injury.

⚠WARNING⚠

Wear appropriate eye and face protection when using compressed air. Flying debris and dirt can cause personal injury.

Prior to removing the starter, use steam to clean the area around the starting motor to prevent debris from entering the flywheel housing.

Dry with compressed air.

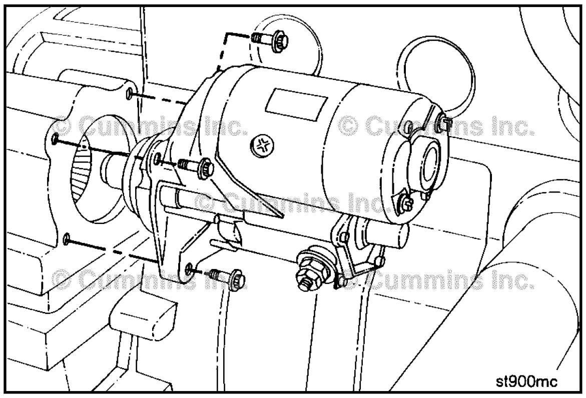

Remove

Remove the three capscrews and the starting motor.

If equipped with a System Integration Module relay, remove the relay support bracket from the starting motor mounting capscrew.

If equipped with a starting motor spacer, remove the spacer and clean all surfaces between the starting motor, starting motor spacer, and flywheel housing with a wire brush.

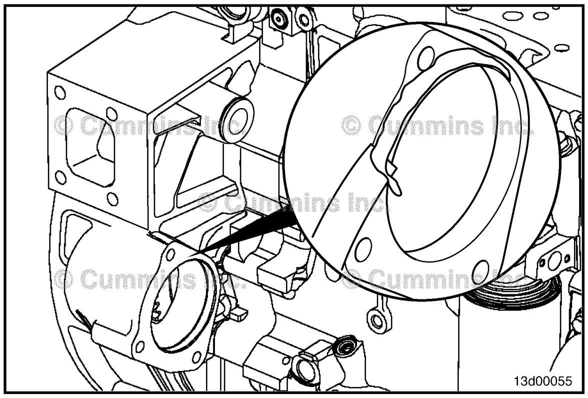

Clean and Inspect for Reuse

For engines that use wet flywheel housing, clean any left over sealant from the starting motor mounting flange on both the flywheel housing and starting motor. Make sure these surfaces are clean of oil and debris.

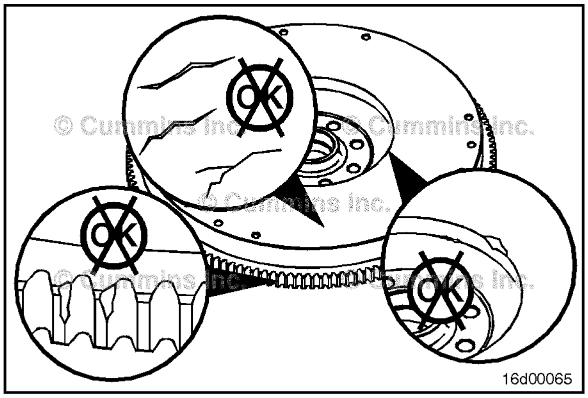

Inspect the starting motor pinion gear and/or flywheel ring gear for chipping or uneven wear.

NOTE: If the start motor pinion gear and/or flywheel ring gear teeth are damaged, they **must** be replaced.

Refer to Procedure 016-005.

Downloaded from www.Manualslib.com manuals search engine

Measure

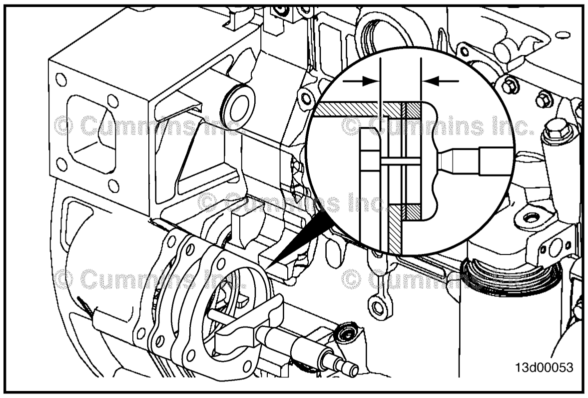

Use a depth micrometer or vernier caliper to measure the distance from the starting motor mounting flange to the forward face of the front side of the flywheel ring gear.

NOTE: Include any spacers previously removed when completing the measurement.

Starting Motor Spacing		
mm		**in**
49.28	MIN	1.94
52.32	MAX	2.06

Add or remove spacers as necessary to achieve the correct starting motor spacing.

Install

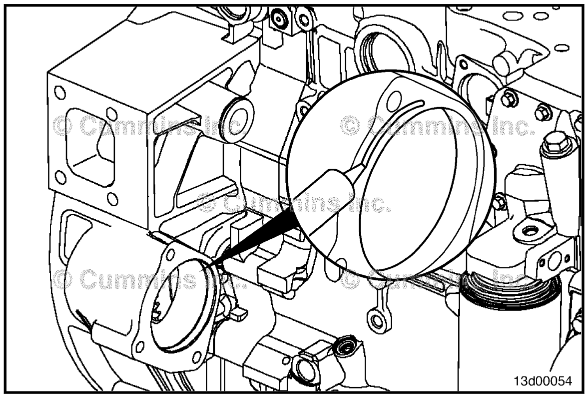

For engines with wet flywheel housings, apply a 1.5 to 2.0 mm [0.06 to 0.09 in] wide bead of sealant, Part Number 3164067, to the flywheel housing starting motor mounting flange.

NOTE: If a starting motor spacer is required, make sure to apply sealant to the side of the spacer that contacts the starting motor.

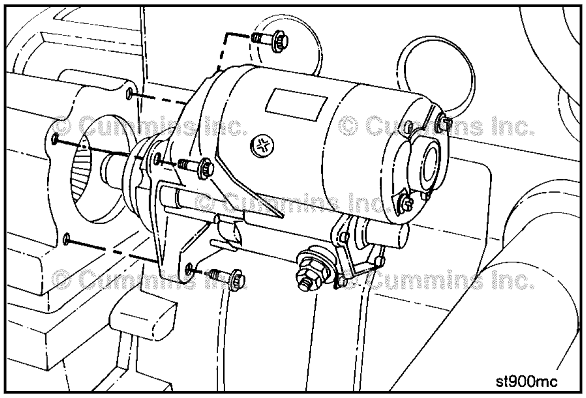

If equipped, install the System Integration Module relay support bracket mounting capscrews.

Install the three capscrews, the starting motor, and starting motor spacer (if required).

Torque Value: 43 N•m [32 ft-lb]

Finishing Steps

Cummins Branded Starters

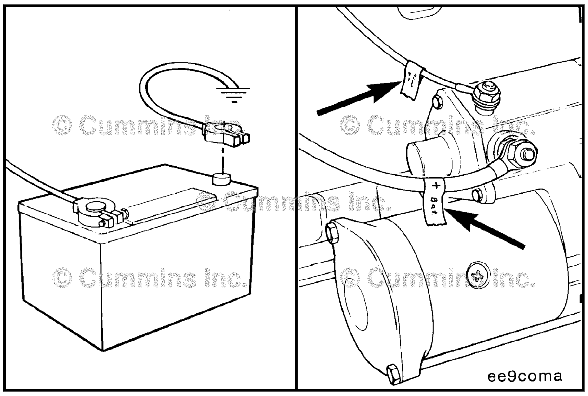

⚠CAUTION⚠

Do not overtighten the electrical connections. starting motor damage can result.

NOTE: Use the location tags to help identify where each wire connection goes.

Connect the electrical connections to the starting motor.

Torque Value:

M5	4 N•m	[35 in-lb]
M10	21 N•m	[185 in-lb]

Connect the batteries. Refer to Procedure 013-009.

Downloaded from www.Manualslib.com manuals search engine

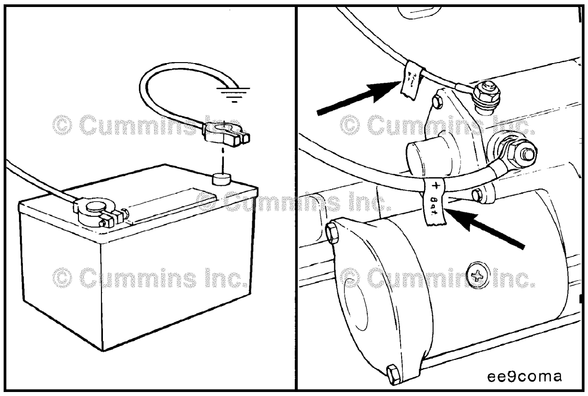

Non-Cummins Branded Starters

CAUTION

Do not overtighten the electrical connections. starting motor damage can result.

NOTE: Use the location tags to help identify where each wire connection goes.

Connect the electrical connections to the starting motor.

For Non-Cummins branded starters, refer to the OEM manual for torque specifications.

Connect the batteries. Refer to Procedure 013-009.

Downloaded from www.Manualslib.com manuals search engine

Section D - System Diagrams

Section Contents

Page
Flow Diagram, Air Intake System D-12
General Information........ D-12
Flow Diagram, Compressed Air System D-15
General Information........ D-15
Flow Diagram, Cooling System D-10
General Information........ D-10
Flow Diagram, Exhaust System D-13
General Information........ D-13
Flow Diagram, Fuel System D-2
General Information........ D-2
Flow Diagram, Lubricating Oil System D-4
General Information........ D-4
System Diagrams - Overview D-1
General Information........ D-1

Downloaded from www.Manualslib.com manuals search engine

This Page Left Intentionally Blank

Downloaded from www.Manualslib.com manuals search engine

System Diagrams - Overview

General Information

The following drawings show the flow through the engine systems. Although parts can change between different applications and installations, the flow remains the same. The systems shown are:

- Fuel System
- Lubricating Oil System
- Coolant System
- Intake Air System
- Exhaust System
- Compressed Air System.

Knowledge of the engine systems can help you in troubleshooting, service, and general maintenance of your engine.

Downloaded from www.Manualslib.com manuals search engine

Flow Diagram, Fuel System

General Information

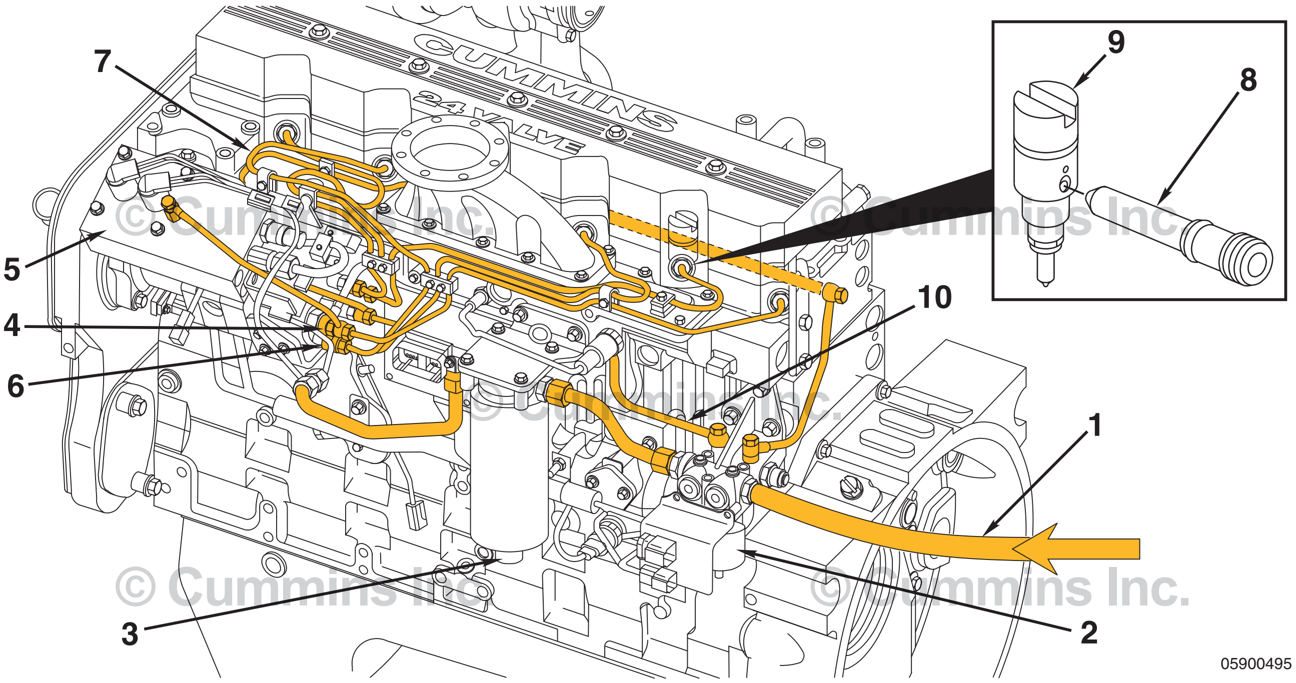

CAPS Fuel System

1 Fuel from supply tank
2 Electronic lift pump
3 Fuel filter and water separator
4 Fuel drain line
5 CAPS injection pump
6 Distributor outlet fitting
7 High-pressure supply lines
8 Fuel connector
9 Injectors
10 Fuel return to supply tank

Downloaded from www.Manualslib.com manuals search engine

Flow Diagram, Fuel System

General Information

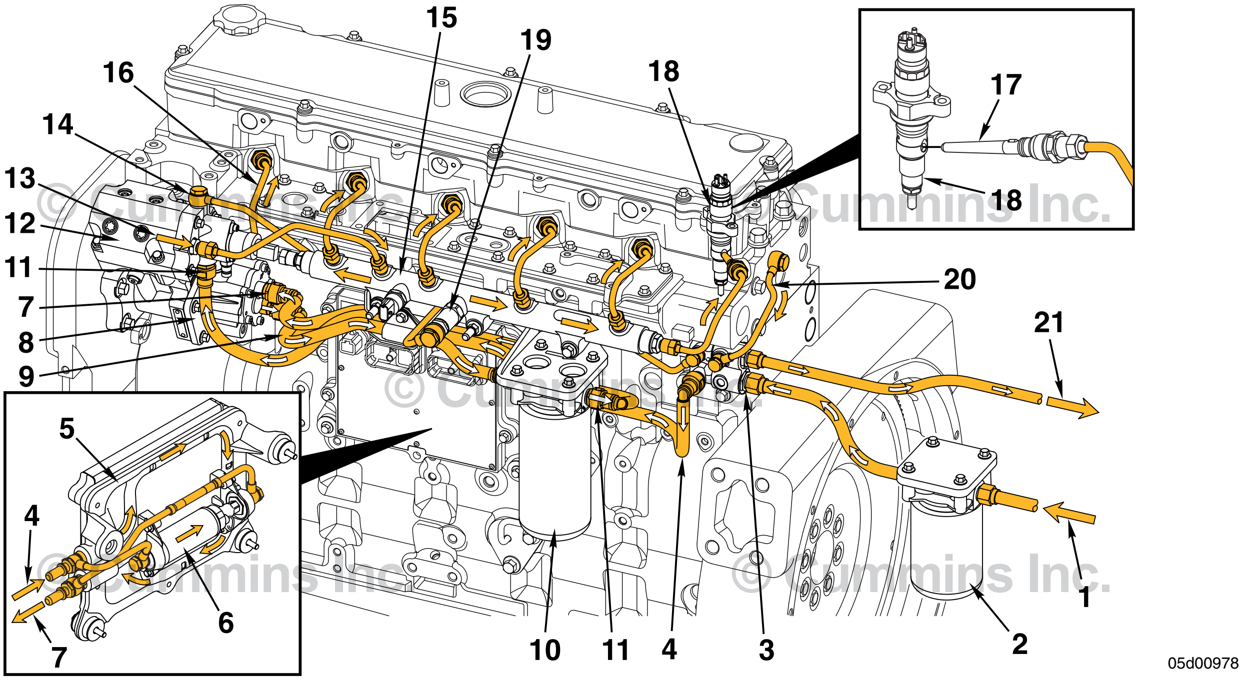

Cummins® Common Rail Fuel System

1 Fuel from supply tank
2 Fuel filter and water separator
3 OEM fuel supply connection
4 Fuel supply to ECM mounted fuel lift pump
5 ECM cooling plate
6 ECM mounted fuel lift pump
7 Fuel outlet from ECM mounted fuel lift pump
8 Fuel gear pump
9 Fuel from gear pump to fuel filter
10 Pressure side fuel filter
11 Fuel inlet to fuel pump actuator
12 High-pressure fuel pump
13 Fuel outlet from high-pressure pump
14 High-pressure pump drain flow connection
15 Fuel rail
16 High-pressure injector supply lines
17 High-pressure fuel connector
18 Fuel injector
19 Fuel pressure relief valve
20 Fuel injector drain flow line
21 Fuel return to supply tanks

Downloaded from www.Manualslib.com manuals search engine

Flow Diagram, Lubricating Oil System

General Information

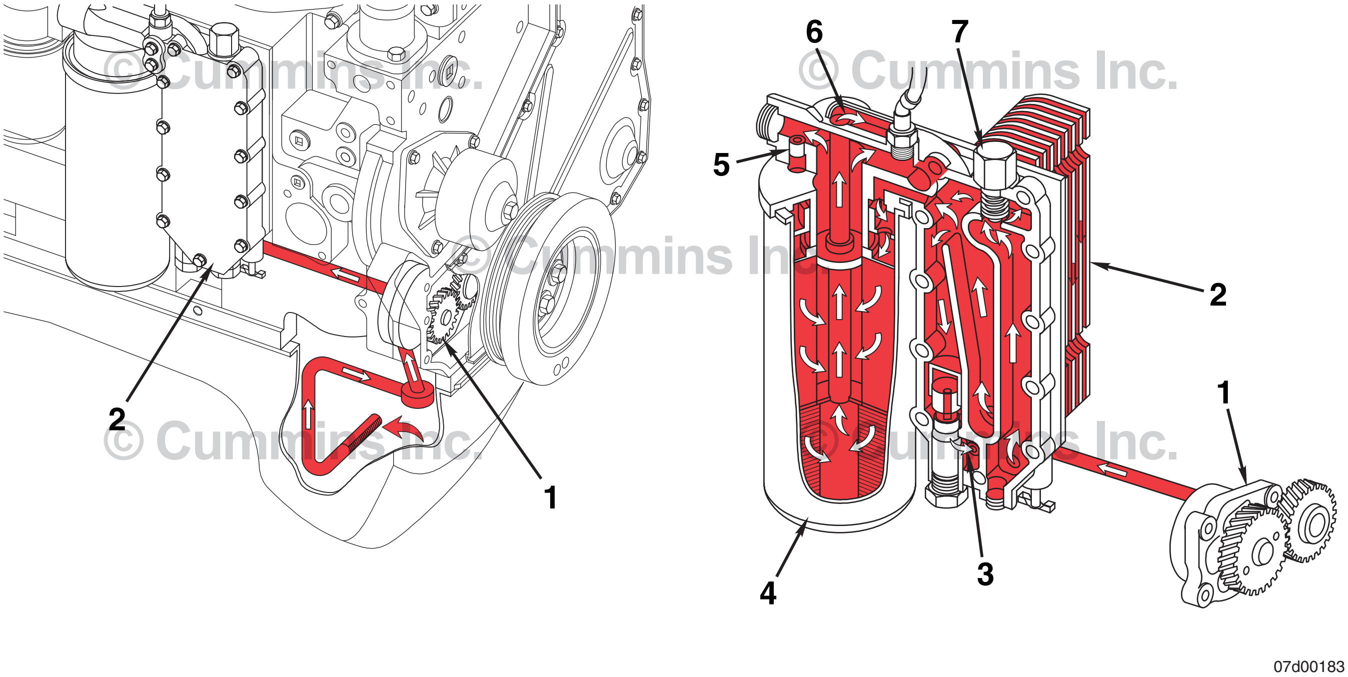

Lubricating Oil Cooler Flow

1 Gerotor lubricating oil pump
2 Lubricating oil cooler
3 Bypass oil to lubricating oil pan
4 Full flow lubricating oil filter
5 Filter bypass valve
6 From lubricating oil filter to main oil rifle
7 Oil thermostat

Downloaded from www.Manualslib.com manuals search engine

Flow Diagram, Lubricating Oil System

General Information

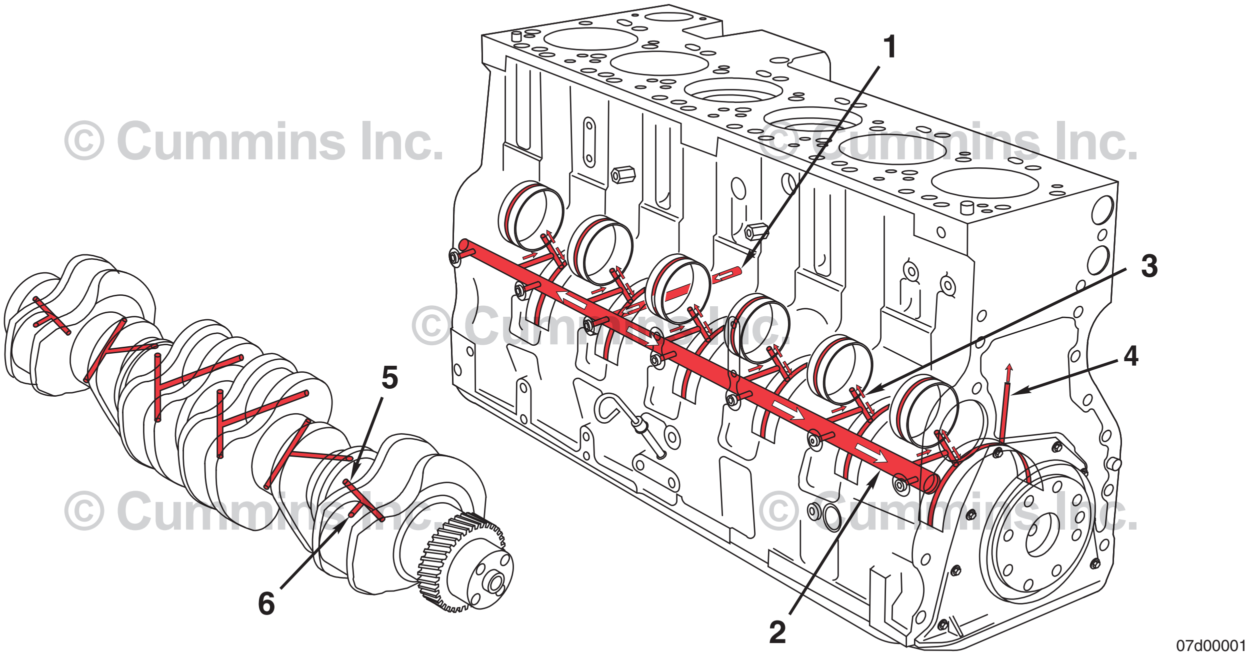

Lubrication for Power Components (ISC engines without CM850 Electronic Control Module)

1 From lubricating oil cooler
2 Main lubricating oil rifle
3 To camshaft
4 To piston cooling nozzle
5 From main lubricating oil rifle
6 To connecting rod bearing.

Downloaded from www.Manualslib.com manuals search engine

Flow Diagram, Lubricating Oil System

General Information

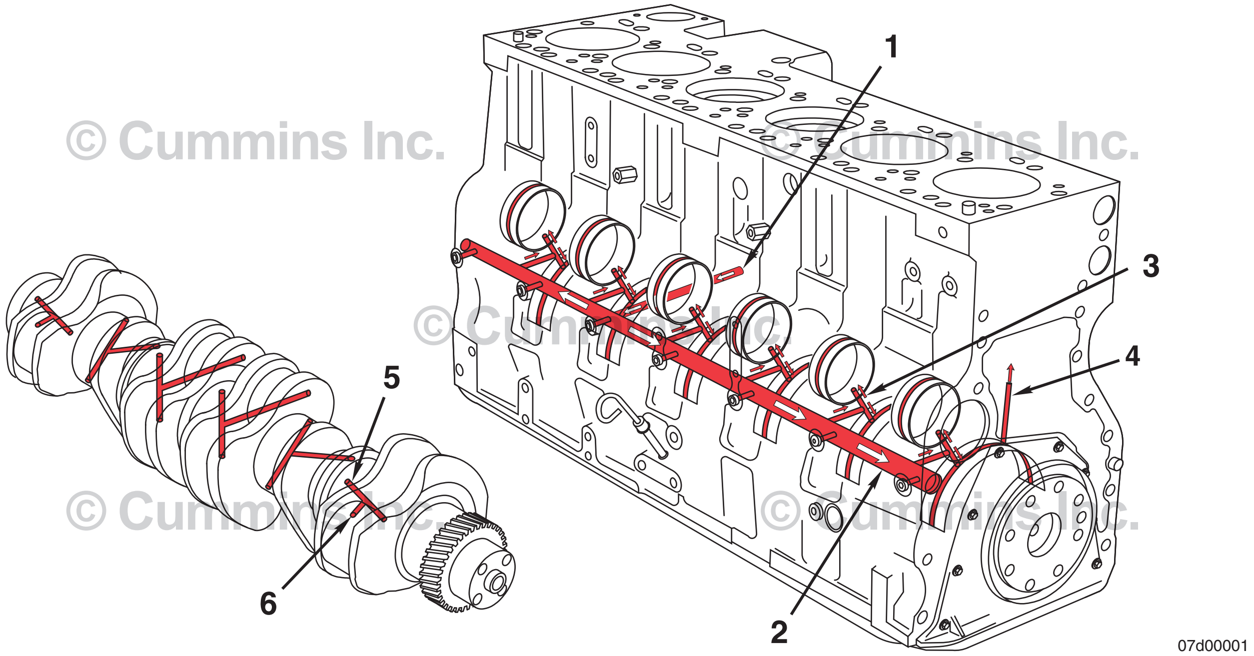

Lubrication for Power Components

1 From lubricating oil cooler
2 Main lubricating oil rifle
3 To camshaft
4 To piston cooling nozzle
5 From main lubricating oil rifle
6 To connecting rod bearing.

Downloaded from www.Manualslib.com manuals search engine

Flow Diagram, Lubricating Oil System

General Information

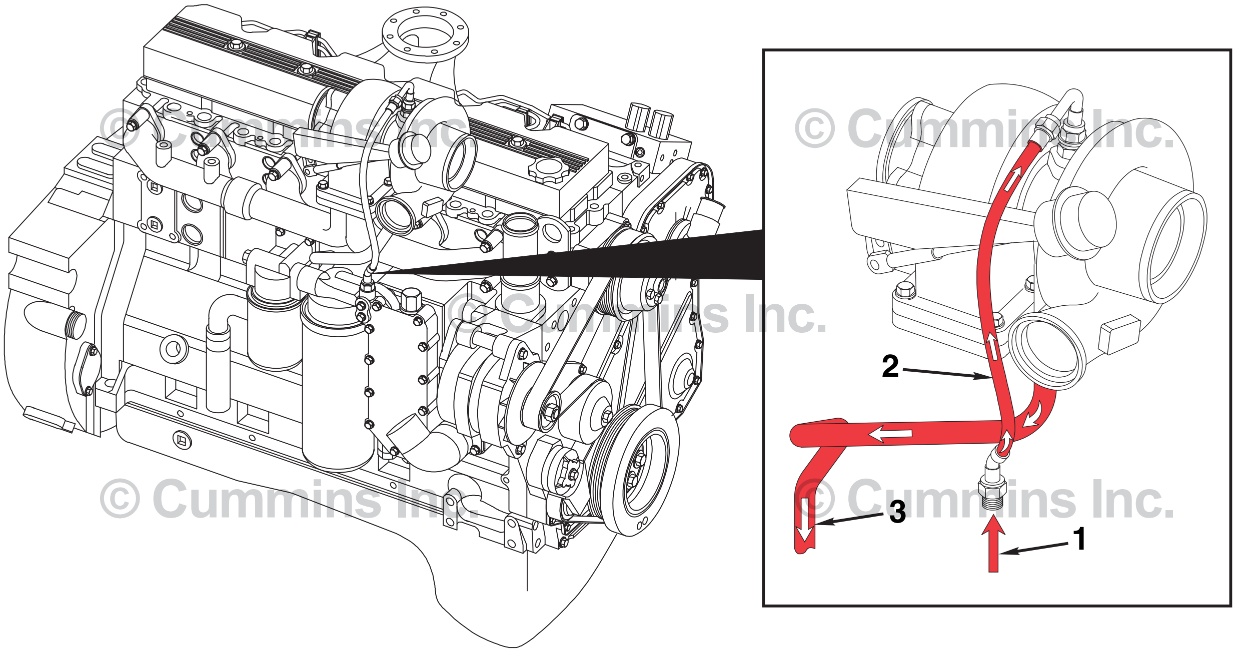

Lubrication for Turbocharger (All Applications Except Marine)

1 Lubricating oil supply from filter

2 Turbocharger lubricating oil supply

3 Turbocharger lubricating oil drain

Downloaded from www.Manualslib.com manuals search engine

Flow Diagram, Lubricating Oil System

General Information

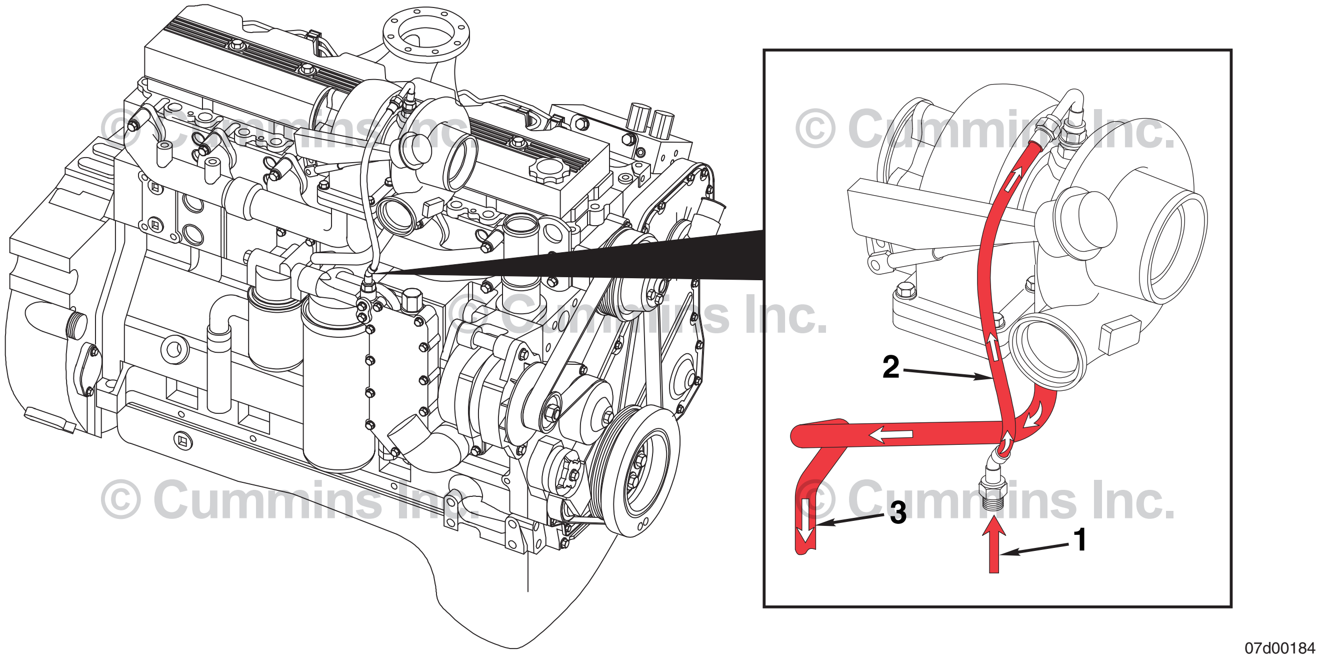

Lubrication for Turbocharger

1 Lubricating oil supply from filter

2 Turbocharger lubricating oil supply

3 Turbocharger lubricating oil drain

Downloaded from www.Manualslib.com manuals search engine

Flow Diagram, Lubricating Oil System

General Information

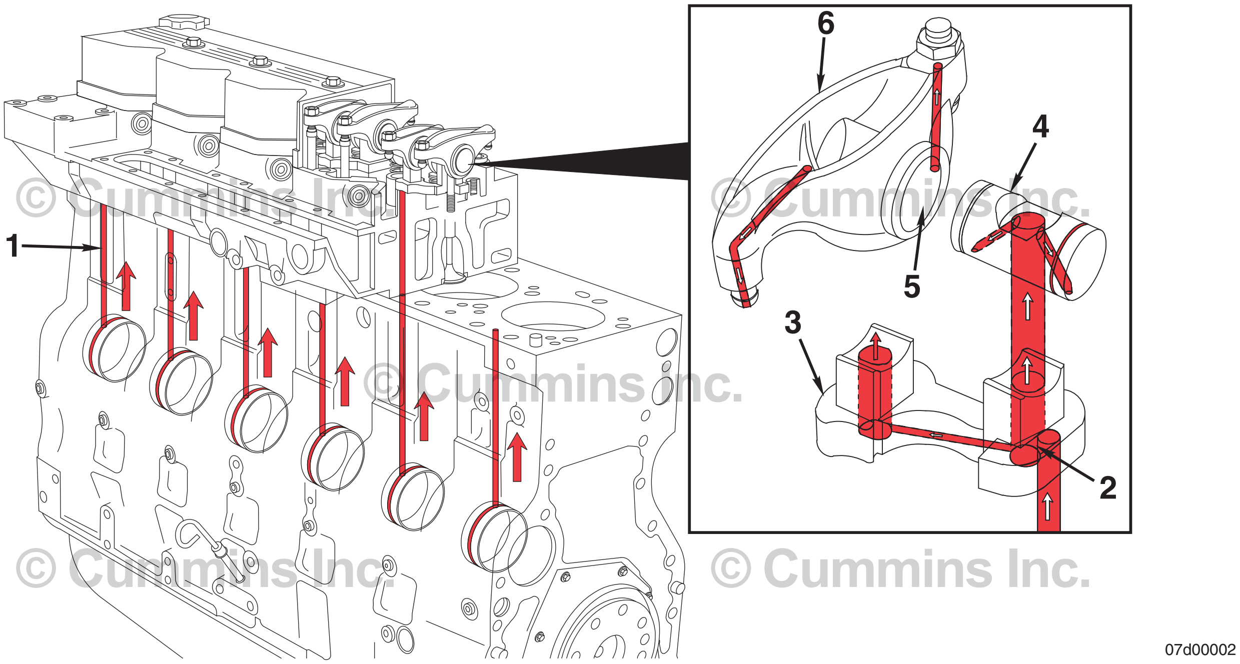

Lubrication for the Overhead

1 From cam bushings
2 Transfer slot
3 Rocker lever support
4 Rocker lever shaft
5 Rocker lever bore
6 Rocker lever.

Downloaded from www.Manualslib.com manuals search engine

Flow Diagram, Cooling System

General Information

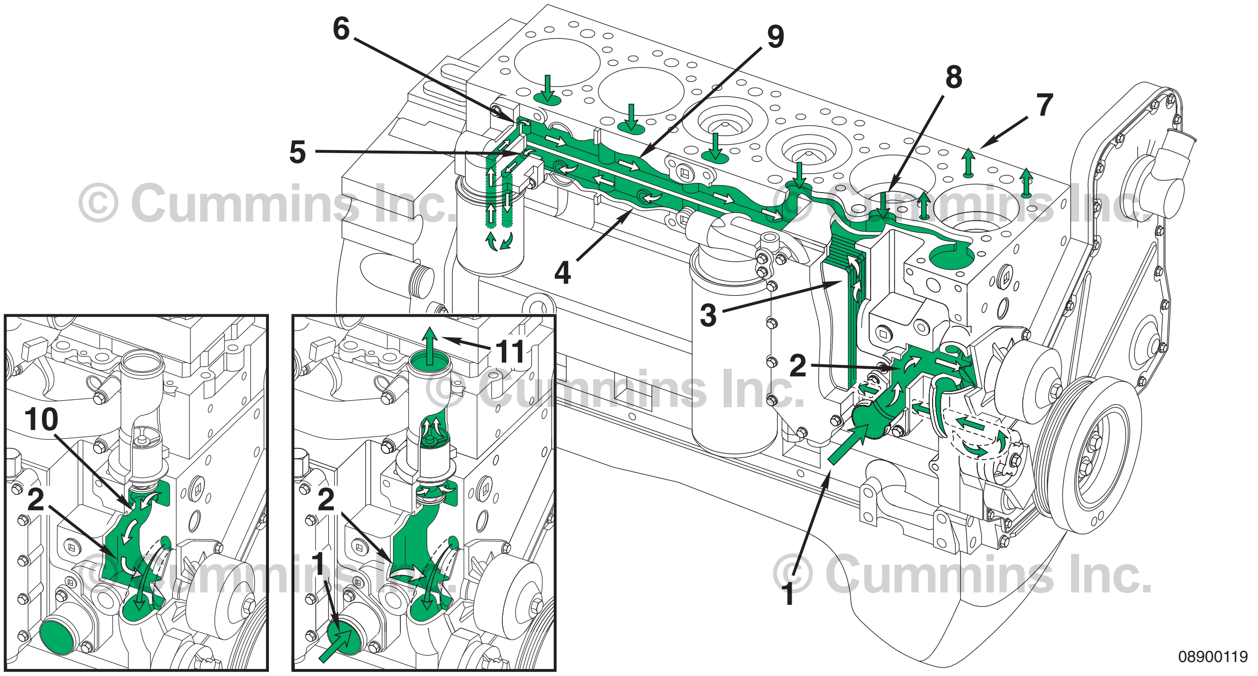

All Applications

1 Coolant inlet from radiator

2 Water pump suction

3 Coolant flow through lubricating oil cooler

4 Block lower water manifold (to cylinders)

5 Coolant filter inlet (optional)

6 Coolant filter outlet (optional)

7 Coolant supply to cylinder head

8 Coolant return from cylinder head

9 Block upper water manifold

10 Thermostat bypass

11 Coolant return to radiator

Downloaded from www.Manualslib.com manuals search engine

Flow Diagram, Cooling System

General Information

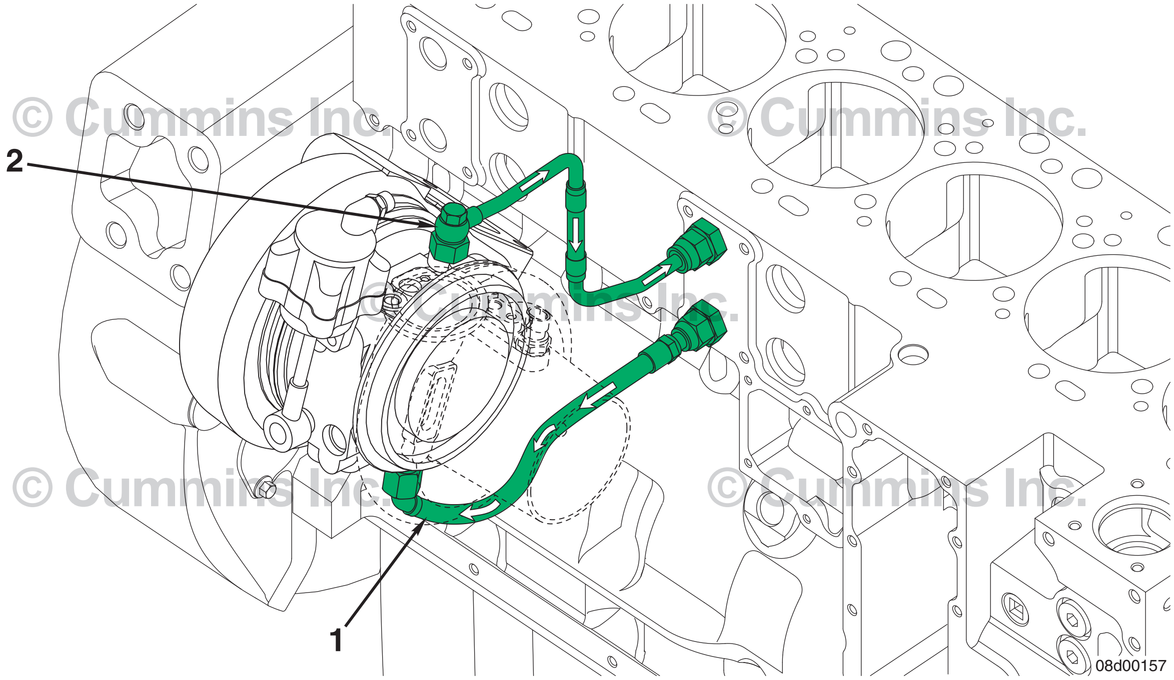

All Applications Except Marine

1 Turbocharger coolant supply

2 Turbocharger coolant drain

Downloaded from www.Manualslib.com manuals search engine

Flow Diagram, Air Intake System

General Information

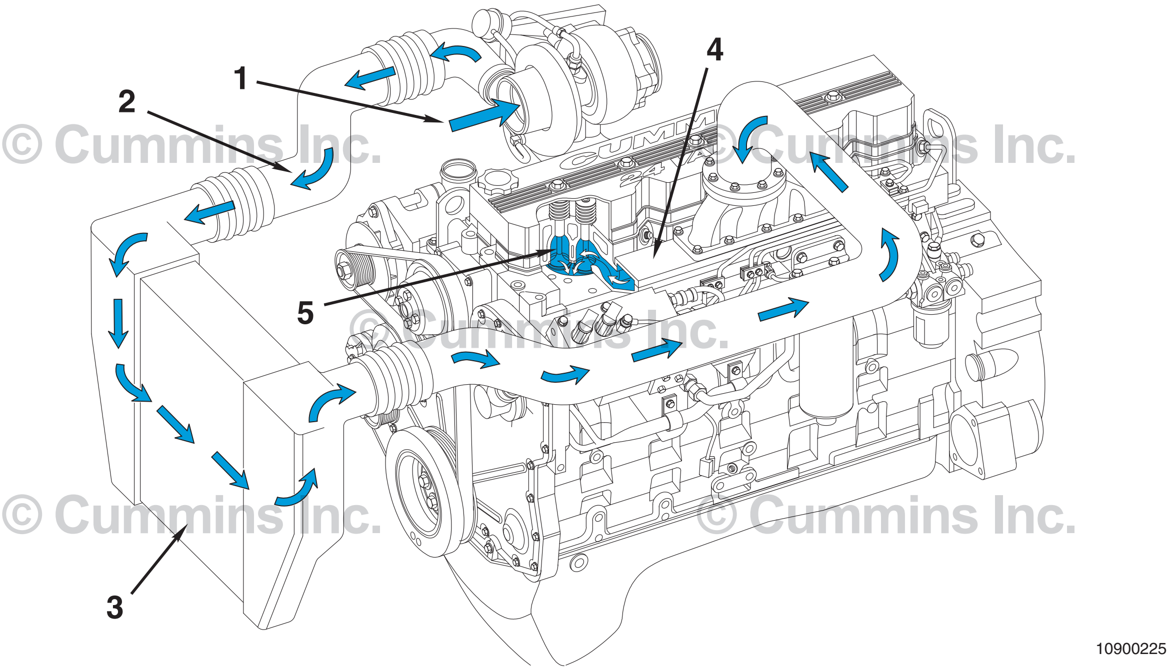

Charge Air Cooled Engines

1 Intake Air Inlet to Turbocharger
2 Turbocharger Air to Charge Air Cooler
3 Charge Air Cooler
4 Intake Manifold (integral part of cylinder head)
5 Intake Valve.

Downloaded from www.Manualslib.com manuals search engine

Flow Diagram, Exhaust System

General Information

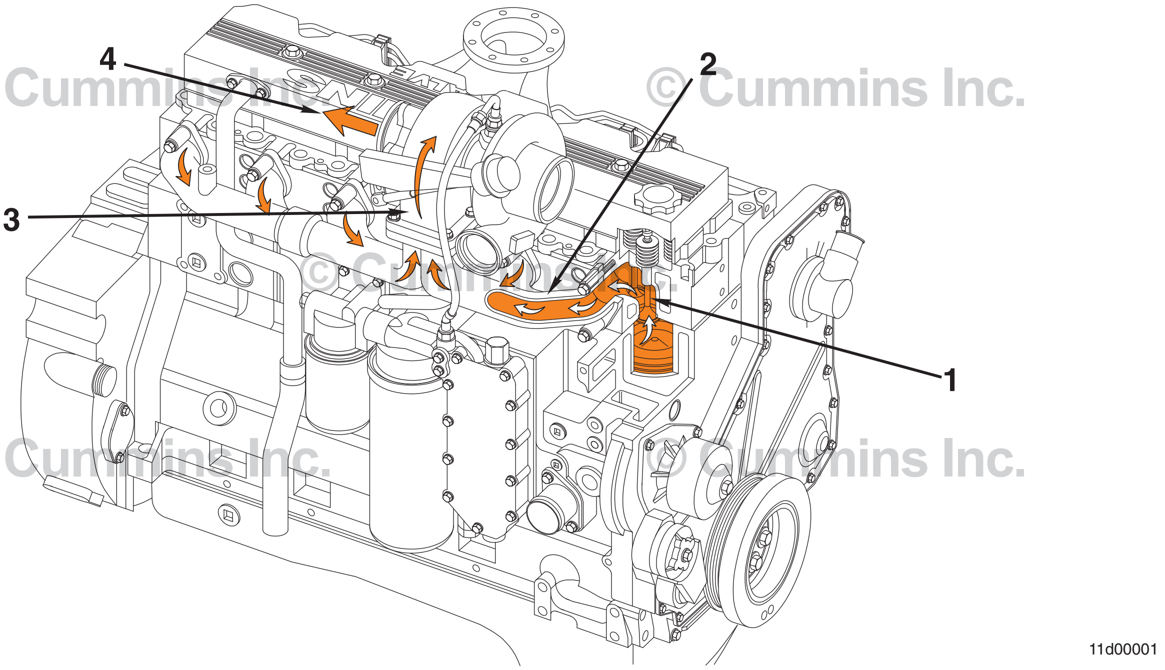

All Applications Except Marine

1 Exhaust valve

2 Exhaust manifold (pulse type)

3 Dual-entry turbocharger

4 Turbocharger exhaust outlet.

Downloaded from www.Manualslib.com manuals search engine

Flow Diagram, Exhaust System

General Information

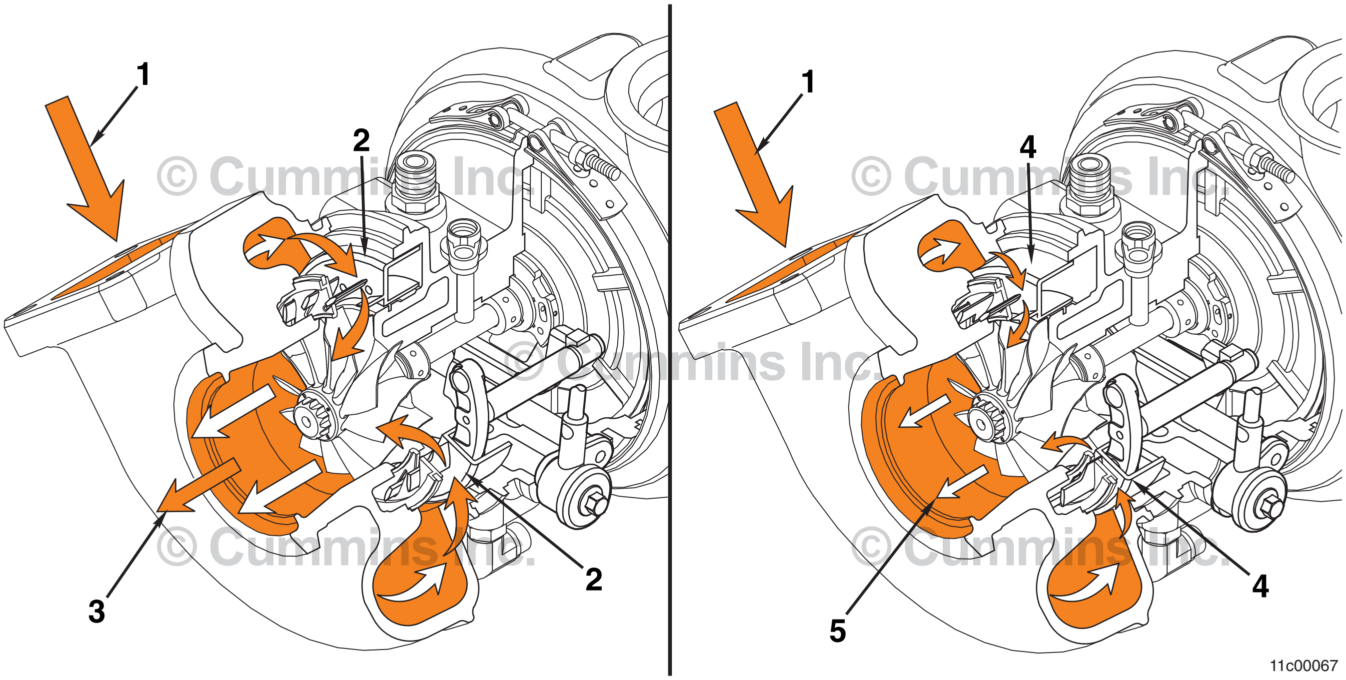

Variable Geometry Turbocharger

1 Exhaust in
2 Sliding nozzle open
3 Exhaust gas low velocity flow
4 Sliding nozzle closed
5 Exhaust gas high velocity flow

Downloaded from www.Manualslib.com manuals search engine

Flow Diagram, Compressed Air System

General Information

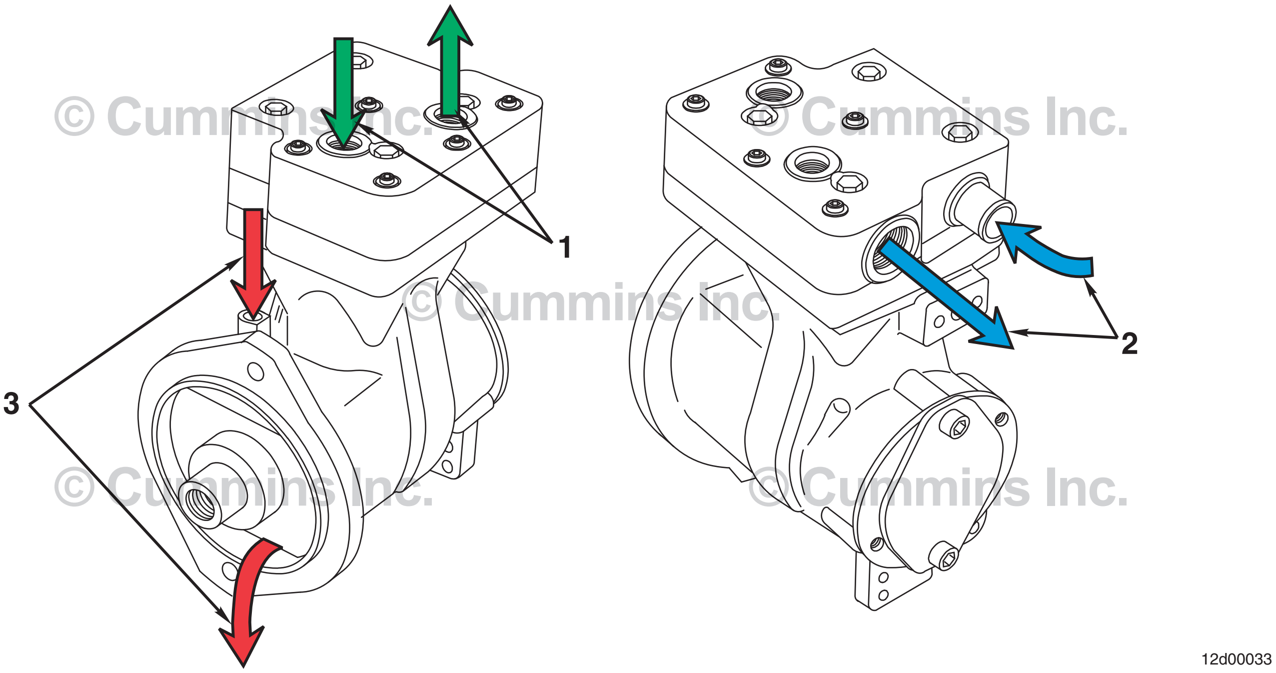

1. Coolant
2. Air
3. Lubricant.

Downloaded from www.Manualslib.com manuals search engine

Notes

Downloaded from www.Manualslib.com manuals search engine

Section L - Service Literature

Section Contents

Page
Additional Service Literature L-1
General Information....L-1
Cummins Customized Parts Catalog L-3
General Information....L-3
Ordering the Customized Parts Catalog....L-3
Ordering by Telephone....L-3
Ordering On-Line....L-3
Service Literature Ordering Location L-2
Contact Information....L-2

Downloaded from www.Manualslib.com manuals search engine

This Page Left Intentionally Blank

Downloaded from www.Manualslib.com manuals search engine

Additional Service Literature

General Information

The following publications can be purchased.

Bulletin Number	Title of Publication
3666271	Troubleshooting and Repair Manual, Electronic Control System, ISC, QSC8.3, and ISL Engines
4021416	Troubleshooting and Repair Manual, ISB, ISBe2, ISBe3, ISBe4, QSB4.5, QSB5.9, QSB6.7, ISC, QSC8.3, ISL, ISLe3, ISLe4, and QSL9, CM850 Electronic Control System
4021418	Troubleshooting and Repair Manual, ISC, ISCe, QSC8.3, ISL, ISLe3, ISLe4, and QSL9 Engines
3666121	Holset® Air Compressors
4022281	SmartCraft™ Marine Control System
3666267	ISC CM554 Wiring Diagram
3666395	QSC CM554 Wiring Diagram
3666416	ISL CM554 Wiring Diagram
3666478	QSL9 CM554 Wiring Diagram
4021421	ISC and ISL CM850 Electronic Control Module Wiring Diagram
4021524	QSB4.5, QSB6.7, QSC8.3 and QSL9 CM850 Electronic Control System Wiring Diagram
4021598	ISLe4 CM850 Wiring Diagram
4081885	QSL9 and QSC8.3 Marine CM850 Electronic Control Module with SmartCraft™ 1.0 Wiring Diagram
4082045	SmartCraft™ 2.2 Zeus™ Wiring Diagram
4082050	SmartCraft™ 2.2 Digital Throttle and Shift (DTS) Wiring Diagram
4082051	SmartCraft™ 2.2 Non-Digital Throttle and Shift (Non-DTS) Wiring Diagram
4082052	Asius System Wiring Diagram
4021428	Operation and Maintenance Manual, ISC, ISCe, and ISL Engines
4021518	Operation and Maintenance Manual, QSC8.3 and QSL9 Engines
4021557	Operation and Maintenance Manual, ISLe3 and ISLe4
4021571	Operation and Maintenance Manual, QSC8.3 and QSL9 Marine Engines
4081893	CMD Smartcraft™ Diesel View Configuration and Operation Manual
4081961	CMD System Speedometer and Tachometer Operation Manual
4021481	Owners Manual, QSC8.3 and QSL9 Marine Engines
4915536	Owners Manual, QSC8.3 and QSL9 Engines
3379000	Air for Your Engine
3379001	Fuel for Cummins® Engines
3379009	Operation of Diesel Engines in Cold Climates
3666132	Cummins® Coolant Requirements and Maintenance
3810303	Parts Reuse Guidelines
3810340	Cummins® Engine Oil and Oil Analysis Recommendations
3884649	Marine Recreational B and C Installation Directions
4021566	Fleetguard® Selective Catalytic Reduction - Urea Specifications

Downloaded from www.Manualslib.com manuals search engine

Service Literature Ordering Location
Contact Information

Region	Ordering Location
United States and Canada	Cummins Distributors or Credit Cards at 1-800-646-5609 or Order online at www.powerstore.cummins.com
All Other Countries	Cummins Distributors or Dealers

Downloaded from www.Manualslib.com manuals search engine

Cummins Customized Parts Catalog

General Information

Cummins is pleased to announce the availability of a parts catalog compiled specifically for you. Unlike the generic versions of parts catalogs that support general high volume parts content; Cummins Customized catalogs contains only the new factory parts that were used to build your engine.

The catalog cover, as well as the content, is customized with you in mind. You can use it in your shop, at your worksite, or as a coffee table book in your RV or boat. The cover contains your name, company name, address, and telephone number. Your name and engine model identification even appears on the catalog spine. Everybody will know that Cummins created a catalog specifically for you.

This new catalog was designed to provide you with the exact information you need to order parts for your engine. This will be valuable for customers that do not have easy access to the Cummins Electronic Parts Catalog or the Cummins Parts Microfilm System.

Additional Features of the Customized Catalog include:

- Engine Configuration Data
- Table of Contents
- Separate Option and Parts Indexes
- Service Kits (when applicable)
- ReCon Part Numbers (when applicable)

Ordering the Customized Parts Catalog

Ordering by Telephone

North American customers can contact their Cummins Distributor or call Gannett Direct Marketing Services at 1-800-646-5609 and order by credit card. Outside North America order on-line or make an International call to Gannett at (++)502-454-6660.

Ordering On-Line

The Customized Parts Catalog can be ordered On-Line from the Cummins Powerstore by credit card.

Contact GDMS or the CUMMINS POWERSTORE for the current price; Freight may be an additional expense.

Information we need to take your Customized Parts Catalog Order. This information drives the cover content of the CPC.

- Customer Name
- Street Address
- Company Name (optional)
- Telephone no.
- Credit Card No.
- Cummins Engine Serial Number (located on the engine data plate)
- Please identify the required media: Printed Catalog, CD-ROM, or PDF File

Unfortunately not all Cummins Engines can be supported by this parts catalog. Engines older than 1984 or newer than 3 months may not have the necessary parts information to compile a catalog. We will contact you if this occurs and explain why we are unable to fill your order.

Customized Parts Catalogs are produced specifically for a single customer. This means they are not returnable for a refund. If we make an error and your catalog is not useable, we will correct that error by sending you a new catalog.

Downloaded from www.Manualslib.com manuals search engine

Notes

Downloaded from www.Manualslib.com manuals search engine

Section S - Service Assistance

Section Contents

Page
Distributors - International S-33
Locations S-33
Distributors and Branches S-4
Australia S-24
Canada S-19
China, People's Republic S-22
New Zealand S-28
United States S-4
Division and Regional Offices S-3
Locations S-3
Emergency and Technical Service S-1
General Information S-1
Problem Solving S-1
General Information S-1
Regional Offices - International S-29
Locations S-29
Routine Service and Parts S-1
General Information S-1

Downloaded from www.Manualslib.com manuals search engine

This Page Left Intentionally Blank

Downloaded from www.Manualslib.com manuals search engine

Routine Service and Parts

General Information

Personnel at Cummins Authorized Repair Locations can assist you with the correct operation and service of your system. Cummins has a worldwide service network of more than 5,000 Distributors and Dealers who have been trained to provide sound advice, expert service, and complete parts support. Check the telephone directory, refer to the directory in this section, or the Service Locator at www.cummins.com for the nearest Cummins Authorized Repair Location.

Emergency and Technical Service

General Information

The Cummins Customer Assistance Center provides a 24-hour, toll free telephone number to aid in technical and emergency service when a Cummins Authorized Repair Location can **not** be reached or is unable to resolve an issue with a Cummins product.

If additional assistance is required, call Toll-Free:

- 1-800-DIESELS
- (1-800-343-7357)
- Includes all 50 states, Bermuda, Puerto Rico, Virgin Islands, and the Bahamas.
- East Asia - Customer Assistance Center also for Chinese Domestic Market support Toll-Free:
- 400-810-5252
- Outside of North America contact your Regional Office. Telephone numbers and addresses are listed in the International Directory.

Problem Solving

General Information

Normally, any problem that arises with the sale, service, or repair of your engine can be handled by a Cummins Authorized Repair Location in your area. Refer to the telephone directory, the directory in this section, or the Service Locator at www.cummins.com for the nearest Cummins Authorized Repair Location. If the problem has **not** been handled satisfactorily, follow the steps outlined below:

- If the disagreement is with a Dealer, talk to the Cummins Distributor with whom he has his service agreement.
- If the disagreement is with a Distributor, call the nearest Cummins Division or Regional Office; however, most problems are solved below the Division or Regional office level. Telephone numbers and addresses are listed in this section. Before calling, write down the following information:
  - Engine model and serial number
  - Type and make of equipment
  - Total kilometers [miles] or hours of operation
  - Warranty start date
  - Nature of problem
  - Summary of the current problem arranged in the order of occurrence
  - Name and location of the Cummins Distributor or Dealer
- If a problem can **not** be resolved satisfactorily through your Cummins Authorized Repair Location or Division Office, contact:
  - Cummins Customer Assistance Center - 41403, Cummins Inc., Box 3005, Columbus, IN 47202-3005
  - Telephone: +1 800-diesels / +1 800-343-7357 (USA Only)

Downloaded from www.Manualslib.com manuals search engine

- Telephone: +1 812-377-3000 (International)

Downloaded from www.Manualslib.com manuals search engine

Division and Regional Offices - Locations

Australia Regional Office (This office also serves New Zealand)		Cummins Engine Company Pty. Ltd., 2 Caribbean Drive Scoresby, Victoria, 3179, Australia, Telephone: (61-3) 9765-3222, Fax: (61-3) 9763-0079
Cummins Americas Regional Office (This office serves Puerto Rico and South America excluding Brazil)		Cummins Americas Inc., 3350 SW 148 Avenue, Suite 205, Miramar, FL, 33027, U.S.A, Telephone: [1-954] 431-5511, Fax: [1-954] 433-5797
China Beijing		Cummins (China) Investment Co. Ltd, 28F, Tower A, GATEWAY, No.18, Xiaguangli North Road, East Third Ring, Chaoyang District, Beijing, 100027, China, Telephone: [86-10] 84548888, Fax: [86-10] 67876347
Brazil		Cummins Brasil Ltda., Rua Jati, 26607180-900 Guarulhos, Sao Paulo, Brazil, Phone: [55-11] 6465-9811, Fax: [55-11] 6412-1483
Daventry (Africa, Middle East, Czech Republic)		Cummins Engine Company Ltd, Royal Oak Way South, Daventry, Northants, NN11 5NU, United Kingdom, Telephone: [44-1327] 886000, Fax: [44-1327] 886106
Dubai - United Arab Emirates		Cummins Middle East FZE, Units ZF 5/6Jebel Ali Free Zone, P.O.Box No 17636, Dubai, United Arab Emirates, Telephone: [971-4] 883 8998, Fax: [971-4] 883 7971
India - Pune		Cummins India Ltd., Kothrud, Pune, Maharashtra, 411029, India, Telephone: [91-20] 2538-5435 / 0240 / 1105, Fax: [91-20] 2538-0125
Korea - Seoul		Cummins Korea Ltd., 25th floor, ASEM tower,159-1, Samsung-Dong, Kangnam-ku, Seoul, 135-798, South Korea, Telephone: [82-2] 3420-0901, Fax: [82-2] 3452-4113 / 539-6569
SLP Mexico		Cummins, S. de R.L. de C.V., Arquimedes No. 209Col., Polanco, Mexico Distrito Federal, 11560, Mexico, Telephone: [52-5] 254-3822 / 3783 / 3622, Fax: [52-5] 254-3645
Russia - Moscow		Cummins Engine Company, Inc., Park Place, Office E708, 113/1 Leninskiy Prospect, Moscow, 117198, Russia, Telephone: [7-495] 956-51-22 / 23, Fax: [7-495] 956-53-62
Singapore		Cummins Diesel Sales Corporation, 8 Tanjong Penjuru, Singapore, 609019, Singapore, Telephone: [65] 6265-0155,

Downloaded from www.Manualslib.com manuals search engine

Distributors and Branches - United States

Alabama	**Birmingham**	Cummins Mid-South, LLC 2200 Pinson Highway P.O. Box 1147 Birmingham, AL 35217 Telephone: (205) 841-0421 FAX: (205) 849-5926
Alabama	**Mobile**	Cummins Mid-South, LLC 1924 N. Beltline Hwy. Mobile, AL 36617 Telephone: (334) 456-2236 FAX: (334) 452-6419
Alaska	**Anchorage**	Cummins Northwest, Inc. 2618 Commercial Drive Anchorage, AK 99501-3095 Telephone: (907) 279-7594 FAX: (907) 276-6340
Arizona	**Phoenix**	Cummins Rocky Mountain, LLC 2239 N. Black Canyon Hgwy Phoenix, AZ 85009 Telephone: (602) 252-8021 FAX: (602) 253-6725
Arkansas	**Little Rock**	Cummins Mid-South, Inc. 6600 Interstate 30 Little Rock, AR 72209 Telephone: Sales: (501) 569-5600 Service: (501) 569-5656 Parts: (501) 569-5613 FAX: (501) 565-2199
California	**San Leandro**	Cummins West, Inc. 14775 Wicks Blvd. San Leandro, CA 94577-6779 Telephone: (510) 351-6101 FAX: (510) 352-3925
California	**Arcata**	Cummins West, Inc. 4751 West End Road Arcata, CA 95521 Telephone: (707) 822-7392 FAX: (707) 822-7585
California	**Bakersfield**	Cummins West, Inc. 4601 East Brundage Lane Bakersfield, CA 93307 Telephone: (805) 325-9404 FAX: (805) 861-8719
California	**Fresno**	Cummins West, Inc. 5333 N Cornelia Ave Fresno, CA 93722 Telephone: (559) 277-6760 FAX: (559) 277-6769

Downloaded from www.Manualslib.com manuals search engine

California	**Redding**	Cummins West, Inc. 20247 Charlanne Drive Redding, CA 96002 Telephone: (530) 222-4070 FAX: (530) 224-4075
California	**Stockton**	Cummins West, Inc. 5250 Claremont Ave Suite 204 Stockton, California 95207, USA Telephone: (209) 472-3460 FAX: (209) 472-3450
California	**West Sacramento**	Cummins West, Inc. 875 Riverside Parkway West Sacramento, CA 95605-1502 Telephone: (916) 371-0630 FAX: (916) 371-2849
California	**Los Angeles**	Cummins Cal Pacific Inc. 1939 Deere Avenue (Irvine) Irvine, CA 92606 Telephone: (949) 253-6000 FAX: (949) 253-6070
California	**Montebello**	Cummins Cal Pacific Inc. 1105 South Greenwood Avenue Montebello, CA 90640 Telephone: (323) 728-8111 FAX: (323) 889-7499
California	**Bloomington**	Cummins Cal Pacific Inc. 3061 S. Riverside Avenue Bloomington, CA 92316 Telephone: (909) 877-0433 FAX: (909) 877-3787
California	**San Diego**	Cummins Cal Pacific Inc. 310 N. Johnson Avenue El Cajon, CA 92020 Telephone: (619) 593-3093 FAX: (619) 593-0600
California	**Ventura**	Cummins Cal-Pacific Inc. 3958 Transport St. Ventura, CA 93003 Telephone: (805) 644-7281 FAX: (805) 644-7284
Colorado	**Denver**	Cummins Rocky Mountain, Inc. 8211 East 96th Ave Henderson, Colorado 80640 Telephone: (303) 287-0201 FAX: (303) 288-7080
Colorado	**Grand Junction**	Cummins Rocky Mountain, Inc. 2380 U.S. Highway 6 & 50 P.O. Box 339 Grand Junction, CO 81501 Telephone: (970) 242-5776 FAX: (970) 243-5494

Downloaded from www.Manualslib.com manuals search engine

Connecticut	**Rocky Hill**	Cummins Metropower, Inc. 914 Cromwell Ave. Rocky Hill, CT 06067 Telephone: (860) 529-7474 FAX: (860) 529-7524
Florida	**Ft. Myers**	Cummins Power South, LLC 2671 Edison Avenue Ft. Myers, FL 33916 Telephone: (941) 337-1211 FAX: (941) 337-5374
Florida	**Jacksonville**	Cummins Power South 755 Pickettville Rd. Jacksonville, FL 32220 Telephone: (904) 378-1902 FAX: (904) 378-1904
Florida	**Hialeah (Miami)**	Cummins Power South, LLC 9900 N.W. 77th Avenue Hialeah Gardens, FL 33016 Telephone: (305) 821-4200 FAX: (305) 557-2992
Florida	**Ocala**	Cummins Power South, LLC 321 Southwest 52nd Ave. Ocala, FL 34474-1892 Telephone: (352) 861-1122 FAX: (352) 861-1130
Florida	**Orlando**	Cummins Power South, LLC 4020 North Orange Blossom Trail Orlando, FL 32810 Telephone: (407) 298-2080 FAX: (407) 290-8727
Florida	**Tampa**	Cummins Power South, LLC 5421 N. 59th Street Tampa, FL 33610 Telephone: (813) 621-7202 FAX: (813) 621-8250
Florida		Cummins Power South, LLC 5906 Breckenridge Parkway Suite J Tampa, FL 33610 Telephone: (813) 664-5868 FAX: (813) 623-5442
Florida		Cummins Power South, LLC 5912 E. Hillsborough Avenue Tampa, FL 33610 Telephone: (813) 626-1101 FAX: (813) 628-8888
Florida		Cummins Power South, LLC 6606 N. 56th Street Tampa, FL 33610 Telephone: (813) 623-3330 FAX: (813) 628-4162

Downloaded from www.Manualslib.com manuals search engine

Georgia	**Atlanta**	Cummins South, Inc. 100 University Ave. S.W. Atlanta, Georgia 30315-2202 Telephone: (404) 527-7800 FAX: (404) 527-7832
Georgia		Cummins South, Inc. 5125 Georgia Highway 85 College Park, GA 30349 Telephone: (404) 763-0151 FAX: (404) 766-2132
Georgia	**Albany**	Cummins South, Inc. 1915 W. Oakridge Drive Albany, GA 31707-4938 Telephone: (912) 888-6210 FAX: (912) 883-1670
Georgia	**Augusta**	Cummins South, Inc. 1255 New Savannah Road Augusta, GA 30901-3891 Telephone: (706) 722-8825 FAX: (706) 722-7553
Georgia	**Savannah**	Cummins South, Inc. 8 Interchange Court Savannah, GA 31401-1627 Telephone: (912) 232-5565 FAX: (912) 232-5145
Hawaii	**Kapolei**	Cummins West Inc. 91-230 Kalaeloa Blvd. Kapolei, HI 96707 Telephone: (808) 682-8110 FAX: (808) 682-8477
Idaho	**Boise**	Cummins Rocky Mountain, LLC 8949 So. Federal Way City Boise, Idaho 84716 Telephone: (208) 336-5000 FAX: (208) 338-5436
Illinois	**Chicago**	Cummins Power, LLC 7145 Santa Fe Drive Hodgkins, IL 60525 Telephone: (708) 579-9222 FAX: (708) 352-7547
Illinois	**Bloomington**	Cummins Mid-States Power, Inc. (at U.S. 51 N and I-55) 414 W. Northtown Road Bloomington-Normal, IL 61761 Telephone: (309) 452-4454 FAX: (309) 452-1642
Illinois	**Onan Branch**	Cummins/Onan Northern Illinois 8745 W. 82nd Place Justin, IL 60458 Telephone: (708) 563-7070 FAX: (708) 563-7095

Downloaded from www.Manualslib.com manuals search engine

Illinois	**Madison**	Cummins MId-South, LLC 222 SR-203 Madison, Illinois 62060 Telephone: (618) 798-9512 FAX: (618) 798-9521
Illinois	**Rock Island**	Cummins Central Power, LLC 7820 - 42nd Street West Rock Island, IL 61201 Telephone: (309) 787-4300 FAX: (309) 787-4397
Indiana	**Indianapolis**	Cummins Mid-States Power, Inc. P.O. Box 42917 3762 West Morris Street Indianapolis, IN 46242-0917 Telephone: (317) 243-7979 FAX: (317) 240-1925
Indiana		Cummins Mid-States Power, Inc. P.O. Box 42917 3661 West Morris St Indianapolis, IN 46241 Telephone: (317) 486-5287 FAX: (317) 486-5281
Indiana		Cummins Mid-States Power, Inc. 4301 W. Morris St. 3762 West Morris Street Indianapolis, IN 46241 Telephone: (317) 240-1967 FAX: (317) 240-1975
Indiana	**Evansville**	Cummins Cumberland, Inc. 7901 Highway 41 North Evansville, IN 47725 Telephone: (812) 867-4400 FAX: (812) 867-4411
Indiana	**Ft. Wayne**	Cummins Mid-States Power, Inc. 3415 Coliseum Blvd. West (At Jct. I-69 & 30/33) Ft. Wayne, IN 46808 Telephone: (219) 482-3691 FAX: (219) 484-8930
Indiana	**Gary**	Cummins Northern Illinois, Inc. 1440 Texas Street Gary, IN 46402 Telephone: (219) 885-5591 FAX: (219) 883-4817
Indiana	**Indianapolis**	Cummins Mid-States Power, Inc. 3661 West Morris St Indianapolis, IN 46241 Telephone: (317) 486-5287 FAX: (317) 486-5281
Iowa	**Cedar Rapids**	Cummins Central Power, LLC 625 - 33rd Avenue SW Cedar Rapids, IA 52404 Telephone: (319) 366-7537 (24 hours) FAX: (319) 366-7562

Downloaded from www.Manualslib.com manuals search engine

Iowa	**Des Moines**	Cummins Central Power, LLC 1680 N.E. 51st Avenue Des Moines, IA 50313 Telephone: (515) 262-9591 Parts: (515) 262-9744 FAX: (515) 262-0626
Kansas	**Colby**	Cummins Central Power, LLC 1880 South Range Colby, KS 67701 Telephone: (785) 462-3945 FAX: (785) 462-3970
Kansas	**Garden City**	Cummins Central Power, LLC 1285 Acraway Garden City, KS 67846 Telephone: (316) 275-2277 FAX: (316) 275-2533
Kansas	**Wichita**	Cummins Central Power, LLC 5101 North Broadway Wichita, KS 67219 Telephone: (316) 838-0875 FAX: (316) 838-0704
Kentucky	**Louisville**	Cummins Cumberland, Inc. (Corporate Office) 2301 Nelsonville Parkway Louisville, KY 40223 Telephone: (502) 254-7375 FAX: (502) 254-1215
Kentucky	**Hazard**	Cummins Cumberland, Inc. Highway 15 South Hazard, KY 41701 Telephone: (606) 436-5718 FAX: (606) 436-5038
Kentucky	**Louisville**	Cummins Cumberland, Inc. 9820 Bluegrass Parkway Louisville, KY 40299 Telephone: (502) 491-4263 FAX: (502) 499-0896
Louisiana	**Morgan City**	Cummins Mid-South, LLC 9508 Highway 90 E Amelia, LA 70340 Telephone: (504) 631-0576 FAX: (504) 631-0081
Louisiana	**New Orleans**	Cummins Mid-South, LLC 110 E. Airline Highway Kenner, LA 70062 Telephone: (504) 465-3412 FAX: (504) 465-3408
Maine	**Scarborough**	Cummins Northeast, Inc. 10 Gibson Road Scarborough, ME 04074 Telephone: (207) 883-8155 FAX: (207) 883-5526

Downloaded from www.Manualslib.com manuals search engine

Maryland	**Baltimore**	Cummins Power Systems, Inc. 1907 Park 100 Drive MD 21061 Telephone: (410) 590-8700 FAX: (410) 590-8731
Massachusetts	**Boston**	Cummins Northeast, Inc. 100 Allied Drive Dedham, MA 02026 Telephone: (781) 329-1750 FAX: (781) 329-4428
Massachusetts	**Springfield**	Cummins Northeast, Inc. 177 Rocus Street Springfield, MA 01104 Telephone: (413) 737-2659 FAX: (413) 731-1082
Michigan	**Detroit (New Hudson)**	Standby Power, Div. of Cummins Bridgeway, LLC 21810 Clessie Ct New Hudson, Michigan 48165 Telephone: (248) 573-1600
Michigan		Cummins Bridgeway, LLC 54240 Grand River Ave New Hudson, Michigan 48165 Telephone: (517) 573-1900
Michigan	**Grand Rapids**	Cummins Bridgeway, LLC 3715 Clay Avenue, S.W. Grand Rapids, MI 49508 Telephone: (616) 538-2250 FAX: (616) 538-3830
Michigan	**Grand Rapids**	Standby Power, Inc. 7580 Expressway Drive S.W. Grand Rapids, MI 49548 Telephone: (616) 281-2211 FAX: (616) 281-3177
Michigan	**Iron Mountain**	Cummins NPower, LLC 1901 Stevenson Avenue Iron Mountain, MI 49801 Telephone: (906) 774-2424 FAX: (906) 774-1190
Michigan	**Saginaw**	Cummins Bridgeway, LLC 722 N. Outer Drive Saginaw, MI 48605 Telephone: (989) 752-5200 FAX:(989) 752-4194
Minnesota	**St. Paul**	Cummins NPower, LLC 3030 Centre Pointe Drive Suite 500 Roseville, MN 55113 Telephone: (651) 636-1000 FAX: (651) 638-2442
Minnesota	**Duluth**	Cummins NPower, LLC 3115 Truck Center Drive Duluth, MN 55806-1786 Telephone: (218) 628-3641 FAX: (218) 628-0488

Downloaded from www.Manualslib.com manuals search engine

Mississippi	**Jackson**	Cummins Mid-South, LLC 325 New Highway 49 South Jackson, MS 39288-4224 Telephone: (601) 939-7016 FAX: (601) 932-7399
Missouri	**Kansas City**	Cummins Central Power, LLC 8201 NE Parvin Road Kansas City, MO 64161 Telephone: (816) 414-8200 FAX: (816) 414-8299
Missouri	**Joplin**	Cummins Central Power, LLC 3507 East 20th Street Joplin, MO 64801 Telephone: (417) 623-1661 FAX: (417) 623-1817
Missouri	**Springfield**	Cummins Central Power, LLC 3637 East Kearney Springfield, MO 65803 Telephone: (417) 862-0777 FAX: (417) 862-4429
Missouri	**Columbia**	Cummins Mid-South, LLC 5221 Highway 763 North Columbia, MO 65205 Telephone: (314) 449-3711 FAX: (314) 449-3712
Missouri	**Sikeston**	Cummins Mid-South, LLC 101 Keystone Drive Sikeston, MO 63801 Telephone: (573) 472-0303 FAX: (573) 472-0306
Missouri	**Industrial Power Branch**	Cummins Mid-South, LLC 3256 E. Outer Road Scott City, MO 63780 Telephone: (573) 335-7399 FAX: (573) 335-7062
Montana	**Billings**	Cummins Rocky Mountain, LLC 5151 Midland Road Billings, MT 59101 Telephone: (406) 245-4194 FAX: (406) 245-7923 Toll Free #: (800) 332-7788
Montana	**Missoula**	Cummins Northwest, Inc. 4950 North Reserve Street Missoula, MT 59802-1498 Telephone: (406) 728-1300 FAX: (406) 728-8523
Nebraska	**Omaha**	Cummins Great Plains Diesel, Inc. 5515 Center Street Omaha, NE 68106 Telephone: (402) 551-7678 (24 Hours) FAX: (402) 551-1952

Downloaded from www.Manualslib.com manuals search engine

Nebraska	**Kearney**	Cummins Central Power, LLC 515 Central Avenue Kearney, NE 68847 Telephone: (308) 234-1994 FAX: (308) 234-5776
Nevada	**Elko**	Cummins Rocky Mountain, LLC 5370 East Idaho Street Elko, NV 89801 Telephone: (702) 738-6405 FAX: (702) 738-1719
Nevada	**Las Vegas**	Cummins Rocky Mountain, LLC 2750 Losee Road North Las Vegas, NV 89030 Telephone: (702) 399-2614 FAX: (702) 399-7457
Nevada	**Sparks**	Cummins Rocky Mountain, LLC 150 Glendale Avenue Sparks, NV 89431 Telephone: (775) 331-4983 FAX: (775) 331-7429
New Jersey	**Newark**	Cummins Metropower, Inc. 41-85 Doremus Ave. Newark, NJ 07105 Telephone: (973) 491-0100 FAX: (973) 578-8873
New Mexico	**Albuquerque**	Cummins Rocky Mountain, LLC 1921 Broadway N.E. Albuquerque, NM 87102 Telephone: (505) 247-2441 FAX: (505) 842-0436
New Mexico	**Farmington**	Cummins Rocky Mountain, LLC 1101 North Troy King Road Farmington, NM 87401 Telephone: (505) 327-7331 FAX: (505) 326-2948
New York	**Bronx**	Cummins Metropower, Inc. 890 Zerega Avenue Bronx, NY 10473 Telephone: (718) 892-2400 FAX: (718) 892-0055
New York	**Albany**	Cummins Northeast, Inc. 101 Railroad Avenue Albany, NY 12205 Telephone: (518) 459-1710 FAX: (518) 459-7815
New York	**Buffalo**	Cummins Northeast, Inc. 480 Lawrence Bell Dr. Williamsville, NY 14221-7090 Telephone: (716) 631-3211 FAX: (716) 626-0799

Downloaded from www.Manualslib.com manuals search engine

New York	**Syracuse**	Cummins Northeast, Inc. 6193 Eastern Avenue Syracuse, NY 13211 Telephone: (315) 437-2751 FAX: (315) 437-8141
North Carolina	**Charlotte**	Cummins Atlantic, Inc. 11101 Nations Ford Road Charlotte, NC 28273 Telephone: (704) 588-1240 FAX: (704) 587-4870
North Carolina	**Charlotte**	Cummins Atlantic, Inc. 3700 North Interstate 85 Charlotte, NC 28206 Telephone: (704) 596-7401 FAX: (704) 596-3038
North Carolina	**Greensboro**	Cummins Atlantic, Inc. 513 Preddy Boulevard >=reensboro, NC 27406 Telephone: (336) 275-4531 FAX: (336) 275-8304
North Dakota	**Fargo**	Cummins NPower, LLC 3801 - 34th Ave. SW Fargo, ND 58104 Telephone: (701) 282-2466 FAX: (701) 277-5399
North Dakota	**Grand Forks**	Cummins NPower, LLC 4728 Gateway Drive Grand Forks, ND 58201 Telephone: (701) 775-8197 FAX: (701) 775-4833
North Dakota	**Minot**	Cummins NPower, LLC 1501 - 20th Avenue, S.E. Minot, ND 58701 Telephone: (701) 852-3585 FAX: (701) 852-3588
Ohio	**Columbus**	Cummins Bridgeway, LLC 4000 Lyman Drive Hilliard (Columbus), OH 43026 Telephone: (614) 771-1000 FAX: (614) 771-0769
Ohio	**Cincinnati**	Cummins Interstate Power, Inc. 10470 Evendale Drive Cincinnati, OH 45241 Telephone: (513) 563-6670 FAX: (513) 563-0594
Ohio	**Cleveland**	Cummins Bridgeway, LLC 7585 Northfield Road Cleveland, OH 44146 Telephone: (440) 439-6800 FAX: (440) (440) 439-2131 Toll Free: (800) 243-6885

Downloaded from www.Manualslib.com manuals search engine

Ohio	**Toledo**	Cummins Bridgeway, LLC 801 Illinois Avenue Maumee , OH 43537 Telephone: (419) 893-8711 FAX: (419) 893-5362
Ohio	**Youngstown**	Cummins Bridgeway, LLC 7145 Masury Road Hubbard (Youngstown), OH 44425 Telephone: (216) 534-1935 FAX: (216) 534-5606
Oklahoma	**Oklahoma City**	Cummins Southern Plains ,Ltd. 5800 West Reno Oklahoma City, OK 73127 Telephone: (405) 946-4481 (24 hours) FAX: (405) 946-3336
Oklahoma	**Tulsa**	Cummins Southern Plains, Ltd. 16525 East Skelly Drive Tulsa, OK 74116 Telephone: (918) 234-3240 FAX: (918) 234-2342
Oregon	**Coburg/Eugene**	Cummins Northwest, Inc. 91201 Industrial Parkway Coburg, OR 97401 (Telephone: (541) 687-0000 FAX: (541) 687-1977 Toll Free Telephone (800)777-0336
Oregon	**Medford**	Cummins Northwest, Inc. 4045 Crater Lake Highway Medford, OR 97504-9796 Telephone: (541) 779-0151 FAX: (541) 772-2395 Toll Free Telephone (800)826-9414
Oregon	**Pendleton**	Cummins Northwest, Inc. 223 S.W. 23rd Street Pendleton, OR 97801-1810 Telephone: (541) 276-2561 FAX: (541) 276-2564 Toll Free Telephone (800)666-2561
Oregon	**Portland**	Cummins Northwest, Inc. 4711 N. Basin Avenue Portland, OR 97217-3557 Telephone: (503)286-5938 FAX: (503)286-5938 Toll Free Telephone: ((800)283-0336 FAX: (503)240-5553
Pennsylvania	**Philadelphia**	Cummins Power Systems, Inc. 2727 Ford Road Bristol, PA 19007 Telephone: (215) 785-6005 FAX: (215) 785-4085

Downloaded from www.Manualslib.com manuals search engine

Pennsylvania	**Pittsburgh**	Cummins Power Systems, Inc. 3 Alpha Drive Pittsburgh, PA 15138-2901 Telephone: (412) 820-8300 FAX: (412) 820-8308
Pennsylvania	**Harrisburg**	Cummins Power Systems, Inc. 4499 Lewis Road Harrisburg, PA 17111-2541 Telephone: (717) 564-1344 FAX: (717) 558-8217
Puerto Rico		Cummins de Puerto Rico, Inc. Calle 1 G1 Urb. Industrial, Barrio Palmas Cataño ZIP / Postal Code: 00962 Puerto Rico Telephone: (787) 275-2000 FAX: (787) 275-2030
South Carolina	**Charleston**	Cummins Atlantic Inc. 231 Farmington Road Charleston, SC 29483 Telephone: (843) 851-9819 FAX: (843) 875-4338
South Carolina	**Columbia**	Cummins Atlantic, Inc. 2791 Shop Road Ext Columbia, South Carolina 29209 Telephone: (803) 799-2410 FAX: (803) 779-3427
South Dakota	**Sioux Falls**	Cummins Central Power, LLC 701 East 54th Street North Sioux Falls, SD 57104 Telephone: (605) 336-1715 FAX: (605) 336-1748
Tennessee	**Memphis**	Cummins Mid-South, LLC 670 Riverside Drive Memphis, TN 38173 Telephone: (901) 577-0600 FAX: (901) 522-8758
Tennessee	**Chattanooga**	Cummins South, Inc. 1509 East 26th Street Chattanooga, TN 37407-1095 Telephone: (423) 629-1447 FAX: (423) 629-1494
Tennessee	**Knoxville**	Cummins Cumberland, Inc. 1211 Ault Road Knoxville, TN 37914 Telephone: (423) 523-0446 FAX: (423) 523-0343
Tennessee	**Memphis**	Cummins Mid-South, LLC 1784 E. Brooks Road Memphis, TN 38116 Telephone: (901) 577-0666 FAX: (901) 522-8758

Downloaded from www.Manualslib.com manuals search engine

Tennessee	**Nashville**	Cummins Cumberland, Inc. 706 Spence Lane Nashville, TN 37217 Telephone: (615) 366-4341 FAX: (615) 366-5693
Texas	**Arlington**	Cummins Southern Plains, Ltd. 600 N Watson Road Arlington, TX 76004-76011 Telephone: (817) 640-6801 FAX: (817) 640-6852
Texas	**Amarillo**	Cummins Southern Plains, Ltd. 5224 Interstate 40 - Expressway East Amarillo, TX 79120-1570 Telephone: (806) 373-3793 (24 hours) FAX: (806) 372-8547
Texas	**Dallas**	Cummins Southern Plains, Ltd. 3707 Irving Boulevard Dallas, TX 75247 Telephone: (214) 631-6400 (24 hours) FAX: (214) 631-2322
Texas	**El Paso**	Cummins Rocky Mountain, LLC 14333 Gateway West El Paso, TX 79927 Telephone: (915) 852-4200 FAX: (915) 852-3295
Texas	**Fort Worth**	Cummins Southern Plains, Ltd. 3250 North Freeway Fort Worth, TX 76111 Telephone: (817) 624-2107 (24 hours) FAX: (817) 624-3296
Texas	**Houston**	Cummins Southern Plains, Ltd. 7045 North Loop East Houston, Texas 77028 Telephone: (713) 679-2220 FAX: (713) 679-7774
Texas	**Mesquite**	Cummins Southern Plains, Ltd. 2615 Big Town Blvd. Mesquite, TX 75150 Telephone: (214) 321-5555 (24 hours) FAX: (214) 328-2732
Texas	**Odessa**	Cummins Southern Plains, Ltd. 1210 South Grandview P.O. Box 633 Odessa, Texas 79761 Telephone: (915) 332-9121 (24 hours) FAX: (915) 333-4655
Texas	**San Antonio**	Cummins Southern Plains, Ltd. 6226 Pan Am Expressway North San Antonio, TX 78218-0385 Telephone: (512) 655-5420 (24 hours) FAX: (512) 655-3865

Downloaded from www.Manualslib.com manuals search engine

Utah	**Salt Lake City**	Cummins Rocky Mountain, LLC 1030 South 300 West Salt Lake City, UT 84101 Telephone: (801) 524-1321 FAX: (801) 524-1351
Virginia		
Virginia	**Richmond**	Cummins Atlantic, Inc. 3900 Deepwater Terminal Road Richmond, VA 23234 Telephone: (804) 232-7891 FAX: (804) 232-7428
Virginia	**Tidewater**	Cummins Atlantic, Inc. 3729 Holland Blvd. Chesapeake, VA 23323 Telephone: (757) 485-4848 FAX: (757) 485-5085
Washington	**Seattle**	Cummins Northwest, Inc. 811 S.W. Grady Way Renton, WA 98055 Telephone: (425) 235-3400 FAX: (425) 235-8202 Toll Free: (800) 274-0336
Washington	**Chehalis**	Cummins Northwest, Inc. 926 N.W. Maryland Chehalis, WA 98532-0339 Telephone: (360) 748-8841 FAX: (360) 748-8843 Toll Free: (800) 451-5506
Washington	**Spokane**	Cummins Northwest, Inc. 11134 W. Westbow Blvd. Spokane, WA 99204 Telephone: (509) 455-4411 FAX: (509) 624-4681 Toll Free: (800) 825-2122
Washington	**Tacoma**	Cummins Northwest, Inc. 3701 Pacific Highway East Tacoma, WA 98424-1135 Telephone: (253) 922-2191 FAX: (253) 922-2379
Washington	**Yakima**	Cummins Northwest, Inc. 1905 East Central Avenue Yakima, WA 98901 Telephone: (509) 248-9033 FAX: (509) 248-9035 Toll Free: (800) 688-9033
West Virginia	**Charleston**	Cummins Cumberland, Inc. 3100 MacCorkle Ave. SW P.O. Box 8456 South Charleston, WV 25303 Telephone: (304) 744-6373 FAX: (304) 744-8605

Downloaded from www.Manualslib.com manuals search engine

West Virginia	**Fairmont**	Cummins Cumberland, Inc. Rt 73 So. 145 Middletown Rd Fairmont, WV 26554 Telephone: (304) 367-0196 FAX: (304) 367-1077
Wisconsin	**DePere**	Cummins NPower, LLC Corporate Office 875 Lawrence Drive DePere, WI 54115-5070 Telephone: (920) 337-1991 FAX: (920) 337-9746
Wisconsin		Cummins NPower, LLC 939 Lawrence Dr DePere, Wisconsin 54115 Telephone: (920) 336-9631 FAX: (920) 7336-8984
Wisconsin	**Eau Claire**	Cummins NPower, LLC W2600 Jopke Road P. O. Box 5070 Eau Claire, Wisconsin 54701 Telephone: (715)830-0996 FAX: (715) 830-1087
Wisconsin	**Milwaukee**	Cummins NPower, LLC 840 West Ryan Road Oak Creek, WI 53154 Telephone: (414) 768-7400 FAX: (414) 768-9441
Wisconsin	**Wausau**	Cummins NPower, LLC 7815 Camp Phillips Rd Wausau, WI 54476 Telephone: (715) 359-6888 FAX: (715) 359-3744
Wyoming	**Gillette**	Cummins Rocky Mountain, LLC 2700 Hwy. 14 & 16 North P.O. Box 1207 (82717) Gillette, WY 82716 Telephone: (307) 682-9611 FAX: (307) 682-8242 Toll Free: (800) 773-9611
Wyoming	**Rock Springs**	Cummins Rocky Mountain, LLC 2000 Foothill Blvd. P.O. Box 1634 Rock Springs, WY 82901 Telephone: (307) 362-5168 FAX: (307) 362-5171

Downloaded from www.Manualslib.com manuals search engine

Distributors and Branches - Canada

Alberta	**Edmonton**	Cummins Western Canada 11751 - 181 Street Edmonton, AB T5S 2K5 Telephone: (780) 455-2151 FAX: (780) 454-9512
Alberta		Cummins Western Canada 4887 - 35th Street S.E. Calgary, Alberta T2B 3H6, Canada Telephone: (403) 569-1122 FAX: (403) 569-0027
Alberta	**Hinton**	Cummins Western Canada 122 Hampshire Road Hinton, Alberta T7V 1G8, Canada Telephone: (780) 865-5111 FAX: (780) 865-5714
Alberta	**Lethbridge**	Cummins Western Canada 4005 - 14th Ave N Lethbridge, Alberta T1H 6P6, Canada Telephone: (403) 329-6144 FAX: (403) 320-5383
British Columbia	**Vancouver**	Cummins Western Canada 18452 - 96th Avenue Surrey, B.C., Canada V4N 3P8 Telephone: (604) 882-5000 FAX: (604) 882-5080
British Columbia	**Kamloops**	Cummins Western Canada 976 Laval Crescent Kamloops, B.C. Canada V2C 5P5 Telephone: (250) 828-2388 FAX: (250) 828-6713
British Columbia	**Prince George**	Cummins Western Canada Prince George, B.C. V2M 6E9 Telephone: (250) 564-9111 FAX: (250) 564-5853
British Columbia	**Sparwood**	Cummins Western Canada 731 Douglas Fir Road Sparwood, B.C. VOB 2GO, Canada Telephone: (250) 425-0522 FAX: (250) 425-0323
New Brunswick	**Fredericton**	Cummins Eastern Canada, LP R.R.#1 Doak Road Fredericton, New Brunswick E3B 4X2, Canada Telephone: (506) 451-1929 FAX: (506) 451-1927
Newfoundland	**St. John's**	Cummins Eastern Canada, LP 122 Clyde Avenue Donovans Industrial Park Mount Pearl, Newfoundland A1N 2C2 Canada Telephone: (709) 747-0176 FAX: (709) 747-2283

Downloaded from www.Manualslib.com manuals search engine

Newfoundland	**Wabush**	Cummins Eastern Canada, LP Wabush Industrial Park Wabush, Newfoundland A0R 1B0 Telephone: (709) 282-3626 FAX: (709) 282-3108
Nova Scotia	**Halifax**	Cummins Eastern Canada, LP 50 Simmonds Drive Dartmouth, Nova Scotia B3B 1R3 Telephone: (902) 468-7938 FAX: (902) 468-5177
Ontario		
Ontario	**Kenora**	Cummins Mid-Canada Ltd. Highway 17 East P.O. Box 8 Kenora, Ontario P9N 3X1 Telephone: (807) 548-1941 FAX: (807) 548-8302
Ontario	**Ottawa**	Cummins Eastern Canada, LP 3189 Swansea Crescent Ottawa, Ontario K1G 3W5, Telephone: (613) 736-1146 FAX: (613) 736-1202
Ontario	**Thunder Bay**	Cummins Eastern Canada, LP 1400 W. Walsh Street Thunder Bay Ontario P7E 4X4 Telephone: (807) 577-7561 FAX: (807) 577-1727
Quebec	**Dorval**	Cummins, Eastern Canada, LP 580 Lepihe Dorval, Quebec H9H 1G2 Telephone: (514) 631-5000 FAX: (514) 631-0104
Quebec	**Quebec City**	Cummins Eastern Canada, LP Branch of Cummins Americas, Inc. 2400 Watt Street Ste Foy, Quebec G1P 3T3 Canada Telephone: (418) 651-2911 FAX: (418)651-0965
Quebec	**Val D'Or**	Cummins, Eastern Canada, LP Val D'Or, Quebec J9P 4P6 Telephone: (514) 695-8410 FAX: (514) 695-8917
Saskatchewan	**Lloydminster**	Cummins Western Canada 3709 - 44th Street Lloydminster, SK S9V 0Y9 Telephone: (305) 825-2062 FAX: (305) 825-6702
Saskatchewan	**Regina**	Cummins Western Canada 110 Kress Street Regina, SK S4P 2Z5 Telephone: (306) 721-9710 FAX: (306) 721-2962

Downloaded from www.Manualslib.com manuals search engine

Saskatchewan	**Saskatoon**	Cummins Western Canada 3001 Faithful Avenue Saskatoon, SK S7K 4R4, Canada Telephone: (306) 933-4022 FAX: (306) 242-1722

Downloaded from www.Manualslib.com manuals search engine

Distributors and Branches - China, People's Republic

	Beijing	Cummins Engine (Beijing) Co., Ltd. No. 8, Wan Yuan Street, Beijing Economic and Technology Development Zone, Beijing, 100176, People's Republic of China. Telephone: (86-10) 67882258 Fax: (86-10) 67882285
	Shenyang	Cummins Engine (China) Investment Co., Ltd. ShenYang Workshop & Branch Office. No.5-2 Seventh Street, Shenyang Economic-Technological Development Area, Shenyang, Liaoning 110141, China. Telephone: (86-24) 25506611 Fax: (86-24) 25365599
	Kunming	Cummins (China) Investment Co. Ltd. Kunming Branch. Room 606, Hongta Mansion, No.155 Beijing Road, Kunming, Yunnan 650011, Telephone: (86-871) 3579471/511/579/958 Fax: (86-871) 3579210
	Shanghai	Cummins (China) Investment Co., Ltd. Shanghai Distributor Branch. No. 581, New jin Qiao Road, Pu Dong New Area, Shanghai, Shanghai 201206, China. Telephone: (86-21) 50318966 Fax: (86-21) 50318528
	Urumqi	Cummins Engine (China) Investment Co., Ltd Urumqi Branch. No.7,Shanghai Rd. Urumqi, Xinjiang 830011, China. Telephone: (86-991) 3780332/5/6/7/8/9 Fax: (86-991) 3780334
	Wuhan	Cummins Engine (China) Investment Co., Ltd. Wuhan Branch. No.2 Zhang Po Road, Dong Xi Hu District, A-Kaili Commercial Building, Wuhan, Hubei 430040, China. Telephone: (86-27) 83081677 Fax: (86-27) 83259369 / 83259370
	Guangzhou	Cummins (China) Investment Co., Ltd. Guangzhou. Branch G/F, Unit 1 & 2, Block 5, Xing Hui Yuan, NO. 46, Jinsui Road, Zhu Jiang New City, Guangzhou, Guangdong 510623, China. Telephone: (86-20) 38621009 Fax: (86-20) 38621144

Downloaded from www.Manualslib.com manuals search engine

	Shenzhen	Shenzhen Chongfa Cummins Engine Company Ltd. Tian An Che Gong Miao Industrial Estate,Unit F2.6 - 2D, Shenzhen Shennan Da Dao, Shenzhen, Guangdong 518040, China. Telephone: (86-755) 83415479 Fax: (86-755) 83415480

Downloaded from www.Manualslib.com manuals search engine

Distributors and Branches - Australia

Branches:	**Gepps Cross**	Cummins Engine Company, Pty. Ltd. P.O. Box 108 Blair Athol, 5084 South Australia, Australia Location: 45-49 Cavan Road Gepps Cross, 5094 Telephone: (61-8) 8262-5211
Branches:	**Dosra**	Cummins Engine Company, Pty. Ltd. P.O. Box 124 Darra, 4076 Queensland, Australia Location: 33 Kimberley Street Darra, 4076, Australia Telephone: (61-7) 3375-3277
Branches:	**Bunbury**	Cummins Engine Company, Pty. Ltd. P.O. Box 1751 Bunbury, WA 6230 Australia Location: 11 Dryanda Court Picton, WA 6230 Telephone: (61-8) 9725-6777 FAX: (61-8) 9725-6444
Branches:	**Cairns**	Cummins Engine Company, Pty. Ltd. P.O. Box 7189 Cairns Mail Centre, 4870 Queensland, Australia Location: Liberty Street Cairns, 4870 Telephone: (61-7) 935-2999
Branches:	**Campbellfield**	Cummins Engine Company, Pty. Ltd. Private Bag 9 Campbellfield, 3061 Victoria, Australia Location: 1788-1800 Hume Highway Campbellfield, 3061 Telephone: (613) 9357-9200
Branches:	**Dandenong**	Cummins Engine Company, Pty. Ltd. Lot 7 Greens Road Dandenong, 3175 Victoria, Australia Telephone: (613) 9706-8088
Branches:	**Darwin**	Cummins Engine Company, Pty. Ltd. P.O. Box 37587 Winnellie, 0821 Northern Territory, Australia Location: Lot 1758 Graffin Crescent Winnellie, 0821 Telephone: (61-8) 8947-0766

Downloaded from www.Manualslib.com manuals search engine

Branches:	**Devonport**	Cummins Engine Company, Pty. Ltd. P.O. Box 72E Tasmania, Australia Location: 2 Matthews Way Devonport, 7310 Telephone: (61-3) 6424-8800
Branches:	**Emerald**	Cummins Engine Company, Pty. Ltd. P.O. Box 668 Emerald, 4720 Queensland, Australia Location: Capricorn Highway Emerald, 4720 Telephone: (61-7) 4982-4022
Branches:	**Grafton**	Cummins Engine Company, Pty. Ltd. P.O. Box 18 South Grafton, 2461 New South Wales, Australia Location: 18-20 Induna Street South Grafton, 2461 Telephone: (61-2) 6642-3655
Branches:	**Hexham**	Cummins Engine Company, Pty. Ltd. 21 Galleghan Street Hexham New South Wales, Australia Telephone: (61-2) 4964-8466 FAX: (61-2) 4964-8616
Branches:	**Kalgoorlie**	Cummins Engine Company, Pty. Ltd. P.O. Box 706 Kalgoorlie, 6430 Western Australia, Australia Location: 16 Atbara Street Kalgoorlie, 6430 Telephone: (61-8) 9021-2588
Branches:	**Karratha**	Cummins Engine Company, Pty. Ltd. P.O. Box 377 Karratha, WA 6714 Australia Location: 1490 Lambert Road Karratha, WA 6714 Australia Telephone: (61-8) 9144-4646 FAX: (61-8) 9143-1507
Branches:	**Laverton**	Cummins Engine Company, Pty. Ltd. Locked Bag 1 Laverton, Victoria 3028 Australia Location: 195 Boundary Road Laverton North, Victoria 3028 Australia Telephone: (61-3) 9360-0800 FAX: (61-3) 9360-0438

Downloaded from www.Manualslib.com manuals search engine

Branches:	**Leeton**	Cummins Engine Company, Pty. Ltd. P.O. Box 775 Leeton, NSW 2705 Australia Location: 29 Brady Way Leeton, NSW 2705 Australia Telephone: (61-2) 6953-3077 FAX: (61-2) 6953-3109
Branches:	**Mackay**	Cummins Engine Company, Pty. Ltd. P.O. Box 842 Mackay, 4740 Queensland, Australia Location: 4 Presto Avenue Mackay, 4746 Telephone: (61-7) 4955-1222
Branches:	**Mount Gambier**	Cummins Engine Company, Pty. Ltd. P.O. Box 2219 Mount Gambier, 5290 South Australia, Australia Location: 2 Avey Road Mount Gambier, 5290 Telephone: (61-87) 25-6422
Branches:	**Penrith**	Cummins Engine Company, Pty. Ltd. P.O. Box 132 Cambridge Park, 2747 New South Wales, Australia Location: 7 Andrews Road Penrith, 2750 Telephone: (61-2) 4729-1313
Branches:	**Queanbeyan**	Cummins Engine Company, Pty. Ltd. P.O. Box 527 Queanbeyan, 2620 New South Wales, Australia Location: 15-27 Bayldon Road Queanbeyan, 2620 Telephone: (61-2) 6297-3433 FAX: (61-2) 6297-6709
Branches:	**Regency Park**	Cummins Engine Company, Pty. Ltd. P.O. Box 2147 Regency Park, SA 5942 Australia Location: 11 Manton Street Hindmarsh, SA 5942 Australia Telephone: (61-8) 8346-3832 FAX: (61-8) 8340-2045

Downloaded from www.Manualslib.com manuals search engine

Branches:	**Swan Hill**	Cummins Engine Company, Pty. Ltd. P.O. Box 1264 Swan Hill, 3585 Victoria, Australia Location: 5 McAllister Road Swan Hill, 3585 Telephone: (61-3) 5032-1511
Branches:	**Tamworth**	Cummins Engine Company, Pty. Ltd. P.O. Box 677 Tamworth, 2320 New South Wales, Australia Location: Lot 65 Gunnedah Road Tamworth, 2340 Telephone: (61-2) 6765-5455
Branches:	**Townsville**	Cummins Engine Company, Pty. Ltd. P.O. Box 7339 Garbutt Business Centre, QLD4814 Australia Location: 704-710 Ingham Road Townsville, QLD 4814 Telephone: (61-7) 4774-7733 FAX: (61-7) 4774-7640
Branches:	**Welshpool**	Cummins Engine Company, Pty. Ltd. P. O. Box 52 Welshpool, 6986 Western Australia, Australia Location: 50 Kewdale Road Welshpool, 6106 Telephone: (61-8) 9458-5911
Branches:	**Wetherill Park**	Cummins Engine Company, Pty. Ltd. Private Bag 150 Wetherill Park, NSW 2164 Australia Location: 492-494 Victoria Street Wetherill Park, NSW 2164 Australia Telephone: (61-2) 9616-5300 FAX: (61-2) 9616-5399
Branches:	**Wodonga**	Cummins Engine Company, Pty. Ltd. P.O. Box 174 Wodonga, 3690 Victoria, Australia Location: 9-11 McKoy Street Wodonga, 3690 Telephone: (61-2) 6024-3655

Downloaded from www.Manualslib.com manuals search engine

Distributors and Branches - New Zealand

Auckland		Cummins Engine Company, Pty. Ltd. Private Bag 92804 Penrose, Auckland, New Zealand Location: 440 Church Street Penrose Telephone: (64-9) 579-0085
Branches:	**Auckland**	Cummins Engine Company, Pty. Ltd. Private Bag 92804 Penrose, Auckland, New Zealand Location: 440 Church Street Penrose Telephone: (64-9) 579-0085
Branches:	**Christchurch**	Cummins Engine Company, Pty. Ltd. P.O. Box 16-149 Hornby, Christchurch, New Zealand Location: 35 Parkhouse Road Sockburn, Christchurch Telephone: (64-3) 348-8170
Branches:	**Dunedin**	Cummins Engine Company, Pty. Ltd. P.O. Box 2333 South Dunedin, New Zealand Location: 8 Devon Street Dunedin Telephone: (643) 477-8818
Branches:	**Palmerston North**	Cummins Engine Company, Pty. Ltd. P.O. Box 9024 Palmerston North, New Zealand Location: 852-860 Tremaine Avenue Telephone: (64-6) 356-2209
Branches:	**Rotorua**	Cummins Engine Company, Pty. Ltd. P.O. Box 934 Rotorua, New Zealand Location: 328 Te Ngae Road Rotorua Telephone: (647) 345-6699

Downloaded from www.Manualslib.com manuals search engine

Regional Offices - International - Locations

Regional Office - Daventry	
Cummins Engine Co. Ltd (Serving Czech Republic), (Middle East), (Africa) Royal Oak Way South Daventry, Northamptonshire ZIP / Postal Code: NN11 8NU Brussels Telephone: (44-1327) 886 000 Fax: (44-1327) 886 100	

Region	Africa	
Countries Covered:	Burkina Faso	Burundi
	Cameroon	Central African Republic
	Chad	Congo (Democratic Republic),
	Congo (People's Republic)	Cote d'Ivoire (Ivory Coast)
	Djibouti	Equatorial Guinea,
	Eritrea	Ethiopia
	Gabon	Gambia
	Ghana	Guinea
	Guinea-Bissau	Kenya
	Liberia	Libya
	Mali	Malta
	Mauritania	Morocco
	Niger	Nigeria
	Rwanda	Sao Tome & Principe
	Senegal	Sierra Leone
	Somalia	Togo
	Tunisia	Uganda
	Cape Verde	
Region	Czech Republic	
Countries Covered:	Austria	Czech Republic
	Hungary	Poland
Region	Middle East	
Countries Covered:	Afghanistan	Bahrain
	Cyprus	Egypt
		Iraq
	Jordan	Kuwait
	Lebanon	Oman
	Pakistan	Qatar
	Republic of Yemen	Saudi Arabia
	Turkey	United Arab Emirates

Cumbrasa Regional Office - Brazil	
Cummins Brasil Ltda. Rua Jati, 266 07180-900 Guarulhos Sao Paulo, Brazil Telephone: (55-11) 6465-9811 Fax: (55-11) 6412-1483	

Country Covered:	Brazil

Downloaded from www.Manualslib.com manuals search engine

Beijing Regional Office - China	
Cummins Corporation Bejing Branch (CCBJ) 28, Tower A, Gateway, 18, Xiaguangli North Road, East Third Ring Chaoyang District Beijing 100027 People's Republic of China Telephone: (86-10) 84548888 Fax: (86-10) 6462-0226	
Countries Covered: China Hong Kong S.A.R Mongolia Taiwan	

Gross-Gerau Regional Office - Germany	
Cummins Diesel Deutschland GmbH Odenwaldstr. 23 Groß-Gerau 64521 Germany Telephone: (49-6152) 174-0 Fax: (49-6152) 174-141	
Countries Germany	Switzerland

Cummins India Ltd.	
Kothrud Pune ZIP / Postal Code: 411038 India Telephone: +91-20-2538 5435 or 2538 0240 Fax: +91-20-2538 0125 www.cumminsindia.com	
Countries Covered: Bhutan India Nepal	

Tokyo Regional Office - Japan	
Cummins Japan Ltd. 2nd Floor, Ichiboshi Shiba Bldg 2-14, Shiba 2-chome Minato, Tokyo ZIP / Postal Code: 105-0014 Japan Telephone: (81-3) 5444-7600 Fax: (81-3) 5444-0530	
Country Covered: Japan	

Downloaded from www.Manualslib.com manuals search engine

Seoul Regional Office - Korea		
Cummins Korea Ltd. 25th floor, ASEM tower 159-1, Samsung-Dong Kangnam-ku, Seou ZIP / Postal Code: 135-798 South Korea Telephone: (82-2) 3420-0901 Fax: (82-2) 3452-4113 / 539-6569		
Country Covered:	South Korea	

Col. Polanco Regional Office - Mexico		
Cummins, S. de R.L. de C.V. Arquimedes No. 209 Col. Polanco 4605 Modern Lane Mexico, Distrito Federal ZIP / Postal Code: 11560 Mexico Telephone: (52-5) 254-3822 / 3783 / 3622 Fax: (52-5) 254-3645		
Country Covered:	Mexico	Costa Rica
	Guatemala	Nicaragua
	Honduras	Panama

Moscow Regional Office - Russia		
Cummins Engine Co., Inc. Park Place Office E708 113/1 Leninsky Prospect Russia 117198 Telephone: (7-495) 956-51-22 / 23 Fax: (7-495) 956-53-62		
Countries Covered:	Armenia	
	Azerbaijan	Moldova
	Belarus	Russia
	Tajikistan	
	Georgia	Turkmenistan
	Kyrgyzstan	Ukranie
	Kazakhstar	Uzbekistan

Downloaded from www.Manualslib.com manuals search engine

Southeast Asia Regional Office - Singapore **Singapore**	
Cummins Diesel Sales Corporation 8 Tanjong Penjuru ZIP / Postal Code: 609019 Singapore Telephone: (65) 265-0155 Fax - Parts/MIS/Shipping: (65) 6264-0664	
Countries Covered:	Bangladesh Brunei Cambodia Indonesia Laos
	Malaysia Philippines Singapore Sri Lanka Thailand Vietnam

Latin America Regional Office - Miramar (U.S.A.)	
Cummins Americas, Inc. 3350 SW 148 Avenue Suite 205 Miramar, FL 33027 U.S.A. Telephone: (954) 431-5511 Fax: (954) 433-5797	
Countries Covered:	Argentina Bolivia Chile Colombia Dominican Republic El Salvador Eucador Costa Rica Dominican
	Paraguay Peru Uruguay Venezuela Honduras Nicaragua

Downloaded from www.Manualslib.com manuals search engine

Distributors - International - Locations

Cummins Middle East FZE	**Cummins Middle East FZE**	P.O. Box No 17636, Units ZF 05 & 06Jebel Ali Free Zone, DubaiUnited Arab EmiratesTelephone: 00 9714 8838998Fax: 00 9714 8838997,
United Arab Emirates	**Cummins Emirates Sales & Service LLC**	P.O. Box No 54044Al Quoz Industrial Estate, DubaiUnited Arab EmiratesTelephone: 00 9714 3478184Fax: 00 9714 3478185Toll Free: 800 4184 ,
United Arab Emirates	**Cummins Emirates Sales & Service LLC**	P.O. Box No 70242, Abu DhabiUnited Arab EmiratesTelephone: 00 9712 6722980Fax: 00 9712 6722981,
ALBANIA		(Please contact the Central & Eastern European Regional Office)Cummins Diesel Deutschland GmbHGross-GerauOdenwaldstraße 23Groß-GerauZIP / Postal Code: 64521GermanyTelephone: (49-6152) 174-0Fax: (49-6152) 174-141,
ALGERIA		(Please contact) Cummins Diesel S.A.39 rue AmpèreBP 190Chassieu cédex 69680FranceTelephone: (33-4) 72 22 92 72Fax: (33-4) 78 90 19 56,
ALGERIA		-See SOUTH PACIFIC ISLANDS(Please contact) Cummins2 Caribbean DriveScoresby 3179VictoriaAUSTRALIATelephone: (61-3) 9765-3222Fax: (61-3) 9763-0079,
ANDORRA		- See European Regional Office - Mechelen ,
ANDORRA		Cummins Belgium Egide Walschaertsstraat, 2Industriepark Zuid2800 MechelenBelgiumEuropeTelephone: (32-15) 47 91 00Fax: (32-15) 27 56 86,
ANDORRA		,
ANGOLA	**(Please contact) Cummins Diesel South Africa (Pty) Ltd**	13 Eastern Service RoadKelvin (Neighbourhood), AlexandraRua Major Kahangulo, 134/140Gauteng, South AfricaZIP / Postal Code: 2054South AfricaTelephone: (27-11) 321 8700Fax: (27-11) 444 2012,
ANTIGUA		Miami (Office In U.S.A.)Cummins Power South, LLC9900 N.W. 77 Ave.Hialeah Gardens, FL 33016 Telephone: (305) 821-4200Fax: (305) 557-2992,
ARGENTINA	**Buenos Aires**	Distribuidora Cummins, S.A.Ruta Panamericana KM 32.5El Talar de Pacheco, Buenos AiresZIP / Postal Code: CP 1618Argentina Telephone: (54-11) 4736-6400Fax: (54-11) 4736-6479 / 6466 ,
ARUBA, ISLAND OF		(Please contact) Cummins Power South, LLC9900 N W 77th Ave.Hialeah Gardens, Florida 33016Telephone: (1-305) 821-4200Fax: (1-305) 557-2992,
AUSTRALIA	**Bunbury**	Cummins11 Dryanda CourtPictonBunbury, Western Australia 6229Telephone: (61-8) 9725-6777Fax: (61-8) 9725-6444,

Downloaded from www.Manualslib.com manuals search engine

AUSTRALIA	**Cairns**	Cummins11 Liberty Street Cairns, Queensland 4870AustraliaTelephone: (61-7) 935-2999 Fax: (61-7) 4035 2909,
AUSTRALIA	**Campbellfield**	Cummins1788-1800 Hume Highway Campbellfield, Victoria 3061AustraliaTelephone: (613) 9357-9200 Fax: (613) 9357 9916,
AUSTRALIA	**Dandenong**	Cummins46 Greens Road Dandenong, Victoria 3175 Australia Telephone: (613) 9706-8088Fax: (613) 9706 8016,
AUSTRALIA	**Darwin**	CumminsLot 1758 Graffin Crescent Winnellie, Darwin Northern Territory 0820 AustraliaTelephone: (61-8) 8947-0766 Fax: (61-8) 8984 4569,
AUSTRALIA	**Devonport**	Cummins2 Matthews Way Devonport, Tasmania 7310 AustraliaTelephone: (61-3) 6424-8800 Fax: (61-3) 6424 2200,
AUSTRALIA	**Emerald**	Cummins23 Old Sheepyard PlaceEmerald, Queensland 4720AustraliaTelephone: (61-7) 4982 4022Fax: (61-7) 4982 4159,
AUSTRALIA	**Grafton**	Cummins18 - 20 Induna StreetSouth Grafton, New South Wales 2460AustraliaTelephone: (61-2) 6641 1000Fax: (61-2) 6641 1099,
AUSTRALIA	**Hexham**	Cummins Engine Company, Pty. Ltd.21 Galleghan Street Hexham Newcastle, New South Wales, Australia 2322Telephone: (61-2) 4964-8466 Fax: (61-2) 4964-8616,
AUSTRALIA	**Kalgoorlie**	CumminsLot 62 Great Eastern HighwayCnr Hunter StreetKalgoorlie, Western AustraliaZIP / Postal Code: 6430AustraliaTelephone: (61-8) 9080 1300Fax: (61-8) 9091 7933,
AUSTRALIA	**Karratha**	Cummins1964 Anderson RoadKarratha, Western Australia 6714AustraliaTelephone: (61-8) 9144 4646 Fax: (61-8) 9143 1507,
AUSTRALIA	**Laverton**	Cummins191-195 Boundary RoadLaverton North, Victoria 3026AustraliaTelephone: (61-3) 8368 0800Fax: (61-3) 9360 0438,
AUSTRALIA	**Leeton**	Cummins29 Brady WayLeeton, NSW 2705AustraliaTelephone: (61-2) 6953-3077Fax: (61-2) 6953-3109,
AUSTRALIA	**Mackay**	Cummins46 Southgate DrivePaget, QueenslandZIP / Postal Code: 4740AustraliaTelephone: (61-7) 4952 8100Fax: (61-7) 4952 5631,
AUSTRALIA	**Mount Gambier**	Cummins2 Avey RoadMount Gambier, South Australia 5290AustraliaTelephone: (61-8) 8725 6422Fax: (61-8) 8724 9764,
AUSTRALIA	**Penrith**	CumminsTotal Truck Centre141 Coreen AvenuePenrith, New South Wales 2750AustraliaTelephone: (61-2) 4731 2188Fax: (61-2) 4731 1140,

Downloaded from www.Manualslib.com manuals search engine

AUSTRALIA	**Queanbeyan**	Cummins15-17 Bayldon RoadQueanbeyan, New South Wales 2620AustraliaTelephone: (61-2) 6297 3433Fax: (61-2) 6297 6709,
AUSTRALIA	**Swan Hill**	Cummins5 McAllister RoadSwan Hill, Victoria 3585AustraliaTelephone: (61-3) 5033 1511Fax: (61-3) 5032 9662,
AUSTRALIA	**Tamworth**	CumminsLot 65 Gunnedah RoadTamworth, New South Wales 2340AustraliaTelephone: (61-2) 6765 5455Fax: (61-2) 6765 5443,
AUSTRALIA	**Townsville**	Cummins704-710 Ingham RoadTownsville, Queensland 4810AustraliaTelephone: (61-7) 4774 7733 Fax: (61-7) 4774 7640,
AUSTRALIA	**Welshpool**	Cummins443 Horrie Miller DriveIndustrial ParkPerth International Airport, Western Australia 6105AustraliaTelephone: (61-7) 9475 8777Fax: (61-7) 9475 8666,
AUSTRALIA	**Wetherill Park**	Cummins492-494 Victoria StreetWetherill Park, New South Wales 2164AustraliaTelephone: (61-2) 9616 5300Fax: (61-2) 9616 5399,
AUSTRALIA	**Wodonga**	Cummins9 - 11 McKoy StreetWodonga, Victoria 3690AustraliaTelephone: (61-2) 6024 3655Fax: (61-2) 6024 3102,
AUSTRIA	**Neudörfl**	CumminsBickfordstraße 25Neudörfl, Burgenland 7201Austria Telephone: (43-2622) 77418 0Fax: (43-2622) 77418 4,
BAHAMAS	**Miami (Office in U.S.A.)**	Cummins Power South, LLC9900 N W 77th Ave.Hialeah Gardens, FL 33016 Telephone: (305) 821-4200Fax: (305) 557-2992 ,
BAHRAIN	**Bahrain**	Yusuf Bin Ahmed Kanoo W.L.L.Commercial Division832 Majlees Al Tawoon Highway, Al-Hamriya 611, SitraManamaZIP / Postal Code: Kingdom of BahrainBahrain Telephone: (973) 17 738200Fax: (973) 17 732828,
BALEARIC ISLANDS	**Madrid (Office in Spain)**	Cummins Ventas y Servicio, S.A.Torrelaguna, 56 Madrid 28027SpainTelephone: (34-91) 367-2000 376-2404Fax: (34-91) 407 6604,
BANGLADESH	**Jakson International Ltd.**	87 Suhrawardi Avenue (5th Floor) Baridhara, Dhaka-1212, Bangladesh Cell: +8801730358629 Tel: +88029893621, 9895783 Fax: +88029863307,
BARBADOS	**Miami (Office in U.S.A.)**	Cummins Power South, LLC900 N W 77th Ave.Hialeah Gardens, Florida 33016Telephone: (305) 821-821-4200Fax: (305) 557-2992,
BELGIUM	**Mechelen**	Cummins Distributor Egide Walschaertsstraat, 2Industriepark ZuidMechelenZIP / Postal Code: 2800BelgiumTelephone: (32-15) 479 100Fax: (32-15) 275 686,
BELIZE	**Tampa (Office in U.S.A.)**	Cummins Power South, LLC5421 N. 59th Street Tampa, FL 33610 Telephone: (813) 621-7202 Fax: (813) 621-8250,
BENIN		- See Togo ,

Downloaded from www.Manualslib.com manuals search engine

BENIN	**TOGOMAT s.a.**	Zone Industrielle CNPPMELomeTogoTelephone: (228) 2272395Fax: (228) 2270310,
BERMUDA	**Bronx (Office in U.S.A.)**	Cummins Metropower, Inc. 890 Zerega Avenue Bronx, NY 10473 Telephone: (718) 892-2400Fax: (718) 892-0055,
BHUTAN	**Pune (Office in India)**	Cummins Diesel Sales & Service (India) Ltd35A/1/2, Erandawana Pune, Maharashtra 411038IndiaTelephone: (91-20) 25431234 / 25430666 25431703Fax: (91-20) 25439490,
BOTSWANA- See Southern Africa Regional Office - Kelvin	**Cummins Diesel South Africa (Pty)**	9 Impala Road Kelvin (Neighbourhood), AlexandraGauteng, South Africa 2054South AfricaTelephone: (27-11) 321 8800Fax: (27-11) 444 3254,
BRAZIL	**Belo Horizonte**	Distribuidora Cummins Minas Ltda.Anel Rodoviario, Km 01 - Bairro Olhos D'Agua NorteBelo Horizonte, Minas Gerais 31950Brazil Telephone: (55-31) 3288-1344Fax: (55-31) 3288-1141,
BRAZIL	**Campo Grande**	Cummins Distribuidora de Motores Diesel e Equipamentos Ltda. Av. Rod. BR 163, nr. 5185Campo Grande, MATO GROSSO DO SUL 79060BrazilTelephone: (55-67) 387-8707Fax: (55-67) 387-8707,
BRAZIL	**Curitiba**	Distribuidora Parana de Motores Cummins Ltda.Abel Scuissiato 3020, Bairro AtubaCuritiba, PARANA 83408Brazil Telephone: (55-41) 3675-4500Fax: (55-41) 3675-6077,
BRAZIL	**Fortaleza**	Distribuidora Cummins Diesel do Nordeste LtdaBR 116, km.10 - nr.10.001, MessejanaFortaleza, CEARAZIP / Postal Code: 60871Brazil Telephone: (55-85) 4011-6400Fax: (55-85) 4011-6400,
BRAZIL	**Goianian**	Distribuidora Cummins Centro Oeste Ltda.Centro Oeste Ltda. Av. Caiapo , 777 Bairro Santa GenovevaGoiania, GOIAS 74672Brazil Telephone: (55-62) 269-1010 / 1011Fax: (55-62) 269-1032 / 1021,
BRAZIL	**Manaus**	Powertech Comercial Ltda.Av. Efigenio Sales 1717 - Parque 10Estrada da Ponta Negra, 6080 - SaoManaus, AMAZONAS 69060Brazil Telephone: (55-92) 642-2014Fax: (55-92) 236-6711,
BRAZIL	**Porto Alegre**	Distribuidora Meridional Motores Cummins Ltda.Av. Assis Brasil , 9000 SarandiPorto Alegre, RIO GRANDE DO SUL 91140BrazilTelephone: (55-51) 3021-2288Fax: (55-51) 3364-2288,
BRAZIL	**Rio de Janeiro**	Cummins Distribuidora de Motores Diesel e Equipamentos Ltda.Av. Brasil, 20289BotafogoRio de Janeiro, RIO DE JANEIRO 21515BrazilTelephone: (55-21) 2196-3131Fax: (55-21) 2196-3121,
BRAZIL	**Sao Paulo**	Cummins Distribuidora de Motores Diesel e Equipamentos Ltda.Rua Coronel Euclides Machado, 52Freguesia do OSao Paulo, SAO PAULO 02713BrazilTelephone: (55-11) 3931-2900Fax: (55-11) 3931-2900,

Downloaded from www.Manualslib.com manuals search engine

BRITISH VIRGIN ISLANDS		- See Puerto Rico ,
BRITISH VIRGIN ISLANDS	**Cummins de Puerto Rico, Inc.**	Calle 1 G1Urb. Industrial, Barrio PalmasCataño 00962Puerto RicoTelephone: (787) 275-2000Fax: (787) 275-2030,
BRUNEI		- See Malaysia ,
BRUNEI	**Scott & English (M) Sdn Bhd**	12 Jalan U1/15, Seksyen U1Hicom-Glenmarie Industrial ParkShah Alam, Selangor Darul Ehsan 40150MalaysiaTelephone: (60-3) 7805-1111Fax: (60-3) 7803-5122,
BURKINA - FASO		- See North/West/East and Central Africa Regional Office - Daventry,
BURKINA - FASO	**Cummins Engine Company Ltd**	Royal Oak Way SouthDaventry, NorthantsZIP / Postal Code: NN11 5NUUnited KingdomTelephone: (44-1327) 886000Fax: (44-1327) 886106,
BULGARIA		-See Germany Regional Office - Gross-Gerau ,
BULGARIA	**Cummins Diesel Deutschland GmbH**	Odenwaldstraße 23Groß-Gerau, Hessen 64521GermanyTelephone: (49-6152) 174-0Fax: (49-6152) 174-141,
BURMA	**Kuala Lumpur (Office In Malaysia)**	Scott & English (M) Sdn Bhd12 Jalan U1/15, Seksyen U1Hicom-Glenmarie Industrial ParkShah Alam, Selangor Darul Ehsan 40150MalaysiaTelephone: (60-3) 7805-1111Fax: (60-3) 7803-5122,
BURUNDI	**Brussels (Office in Belgium)**	Cummins Belgium N.V./S.A.Egide Walschaertsstraat, 2Industriepark ZuidMechelen 2800BelgiumTelephone: (32-15) 479 100Fax: (32-15) 275 686,
CAMBODIA		Scott & English (Cambodia) Ltd.No. 20A E0/E1 Russian BoulevardPhnom PenhCambodiaTelephone: (855-23) 723741Fax: (855-23) 723741,
CANARY ISLANDS	**Madrid (Office in Spain)**	Cummins Ventas y Servico S. A.Torrelaguna 56Madrid 28027Spain Telephone: (34-91) 367 20 00 / 367 24 04Fax: (34-91) 407 66 04,
CAPE VERDE		- See ECV PortugalElectro Central Vulcanizadora, LdaRua Conselheiro Martins de CarvalhoLote 1480 ResteloLisbonZIP / Postal Code: 1400PortugalTelephone: (351-21) 3034800Fax: (351-21) 3034801 / 2,
CENTRAL AFRICAN REPUBLIC		- See North/West Africa Regional Office - DaventryCummins Engine Company LtdRoyal Oak Way SouthDaventry, Northants NN11 5NUUnited KingdomTelephone: (44-1327) 886000Fax: (44-1327) 886106,
CHAD		- See North/West/East and Central Africa Regional Office - DaventryCummins Engine Company LtdRoyal Oak Way SouthDaventry, Northants NN11 5NUUnited KingdomTelephone: (44-1327) 886000Fax: (44-1327) 886106,

Downloaded from www.Manualslib.com manuals search engine

CHILE	**Santiago**	Distribuidora Cummins Chile, S.A. Avda. Americo Vespucio # 0631Santiago, QuilicuraZIP / Postal Code: 873-0596Chile Telephone: (56-2) 655-7253 / 7245Fax: (56-2) 655-7216 / 7436,
CHINA, PEOPLE'S REPUBLIC	**Beijing**	Cummins Engine (Beijing) Co., Ltd.No. 8, Wan Yuan StreetBeijing Economic and Technology Development ZoneBeijing, 100176People's Republic of ChinaTelephone: (86-10) 67882258Fax: (86-10) 67882285,
CHINA, PEOPLE'S REPUBLIC	**Shenyang**	Cummins Engine (China) Investment Co., Ltd. ShenYangWorkshop & Branch OfficeNo.5-2 Seventh StreetShenyang Economic-Technological Development AreaShenyang, Liaoning 110141ChinaTelephone: (86-24) 25506611Fax: (86-24) 25365599,
CHINA, PEOPLE'S REPUBLIC	**Kunming**	Cummins (China) Investment Co. Ltd. Kunming BranchRoom 606, Hongta MansionNo.155 Beijing RoadKunming, Yunnan 650011Telephone: (86-871) 3579471/511/579/958Fax: (86-871) 3579210,
CHINA, PEOPLE'S REPUBLIC	**Shanghai**	Cummins (China) Investment Co., Ltd. Shanghai Distributor BranchNo. 581, New jin Qiao RoadPu Dong New AreaShanghai, Shanghai 201206ChinaTelephone: (86-21) 50318966Fax: (86-21) 50318528,
CHINA, PEOPLE'S REPUBLIC	**Urumqi**	Cummins Engine (China) Investment Co., Ltd Urumqi BranchNo.7,Shanghai Rd.Urumqi, Xinjiang 830011ChinaTelephone: (86-991) 3780332/5/6/7/8/9Fax: (86-991) 3780334,
CHINA, PEOPLE'S REPUBLIC	**Wuhan**	Cummins Engine (China) Investment Co., Ltd. Wuhan BranchNo.2 Zhang Po Road, Dong Xi Hu DistrictA-Kaili Commercial BuildingWuhan, Hubei 430040ChinaTelephone: (86-27) 83081677Fax: (86-27) 83259369 / 83259370,
CHINA, PEOPLE'S REPUBLIC	**Guangzhou**	Cummins (China) Investment Co., Ltd. Guangzhou BranchG/F, Unit 1 & 2, Block 5, Xing Hui YuanNO. 46, Jinsui Road, Zhu Jiang New City,Guangzhou, Guangdong 510623ChinaTelephone: (86-20) 38621009Fax: (86-20) 38621144,
CHINA, PEOPLE'S REPUBLIC	**Shenzhen**	Shenzhen Chongfa Cummins Engine Company Ltd.Tian An Che Gong Miao Industrial Estate, Unit F2.6 - 2DShenzhen Shennan Da DaoShenzhen, Guangdong 518040ChinaTelephone: (86-755) 83415479Fax: (86-755) 83415480,
COLOMBIA	**Barranquilla**	Cummins de Colombia, S.A.Calle 65 (Avenida Murillo) #6-31Diagonal a Gran AbastosSoledad, AtlanticoColombiaTelephone: (57-53) 282600 / 282601 / 282602 / 282603 / 282604Fax: (57-53) 282640 / 282641,
COLOMBIA	**Bogota**	Cummins de los Andes S.A. Avenida Ciudad de CaliNo. 11-22Location: Bogota, CundinamarcaColombiaTelephone: (57-1) 294-8444Fax: (57-1) 2294-8431,

Downloaded from www.Manualslib.com manuals search engine

COLOMBIA	**Bucaramanga**	Cummins API Ltda. Kilómetro 7 Vía a Girón - Zona Industrial A.A. 1821Bucaramanga, Colombia Bucaramanga, Santander ColombiaTelephone: (57-76) 468060 / 469262 / 469263Fax: (57-76) 468065,
COLOMBIA	**Cali**	Tecnodiesel LimitadaApartado Aereo No. 6398 Carrera 8, No. 27-43Cali, ValleColombiaTelephone: (57-2) 442-2422Fax: (57-2) 442-1798,
COLOMBIA	**Medellin**	EquitelCarrera 52, # 10-184 Medellin, AntioquiaColombiaTelephone: (57-4) 255-4200Fax: (57-4) 255-4104,
COLOMBIA	**Pereira**	Tecnodiesel Limitada Carrera 16 No. 9 - 68Avenida Simon Bolivar, DosquebradasPereira, RisaraldaColombiaTelephone: (57-63) 306102Fax: (57-63) 300062,
COMOROS		- See Southern Africa Regional Office - Kelvin ,
COMOROS		Cummins Diesel South Africa (Pty) Ltd9 Impala RoadKelvin (Neighbourhood), AlexandraGauteng, South Africa 2054South AfricaTelephone: (27-11) 321 8800Fax: (27-11) 444 3254,
CONGO, PEOPLE'S REPUBLIC	**Mechelen (Office in Belgium)**	Cummins Belgium N.V./S.A.Egide Walschaertsstraat, 2Industriepark ZuidMechelen 2800BelgiumTelephone: (32-15) 479 100Fax: (32-15) 275 686,
CORSICA		- See France (Please contact) Cummins Diesel S.A. 39 rue AmpèreBP 190Chassieu cédex 69680Telephone: (33-4) 479 100Fax: (33-4) 78 90 19 56,
COSTA RICA	**San Jose**	Oficina Regional Cummins de Centro AmericaUrbanización Rincón Verde DosCasa 13ESan Pablo de HeredíaCosta RicaTelephone: (506) 238-1160Fax: (506) 238-1108,
CYPRUS	**Nicosia**	Alexander Dimitriou & Sons Limited158 Limassol AveLatsiaNicosia CY-2235CyprusTelephone: (357-22) 715 300Fax: (357-22) 715 400,
CZECH REPUBLIC		- See Central & Eastern EuropeCummins Czech Republic s.r.o.Komercni zona Pruhonice CestliceObchodni 132Praha, Prague 251 01Czech RepublicTelephone: (420-272) 680 110Fax: (420-272) 680 090,
DENMARK	**Glostrup**	Cummins Diesel Salg & Service A/SHovedvejen 233B, OstedRoskilde 4000 Denmark Telephone: (45-46) 42 35 50Fax: (45-46) 42 30 50,
DJIBOUTI		- See North/West/East and Central Africa,
DJIBOUTI		Cummins Engine Company LtdRoyal Oak Way South Daventry, NorthantsZIP / Postal Code: NN11 5NUUnited KingdomTelephone: (44-1327) 886000Fax: (44-1327) 886106,

Downloaded from www.Manualslib.com manuals search engine

DOMINICAN REPUBLIC	**Santo Domingo**	Argico C. por A.Calle Jose A. Soler No.3Esq. Lope de Vega Santo Domingo, Distrito NacionalDominican RepublicTelephone: (809) 562-6281Fax: (809) 562-4233 ,
DUBAI		- See United Arab Emirates ,
DUBAI		Cummins Middle East FZEP.O. Box No 17636, Units ZF 05 & 06Jebel Ali Free Zone, DubaiUnited Arab EmiratesTelephone: (00 9714) 8838998 Fax: (00 9714) 8838997,
DUBAI	**United Arab Emirates**	Cummins Emirates Sales & Service LLCP.O. Box No 54044United Arab EmiratesTelephone: (00 9714) 3478184Fax: (00 9714) 3478185Toll Free: (800) 4184 ,
ECUADOR	**Guayaquil**	Indusur S.A.Ave. Carlos Julio Arosemena Km. 4Guayaquil, GuayasEcuadorTelephone: (593-4) 220-1177 / 220-0655Fax: (593-4) 220-1052,
ECUADOR	**Quito**	Rectificadora Botar S.A. Av. 10 de Agosto # 5980Quito, PichinchaEcuadorTelephone: (593-2) 2265-177 / 2265-209 / 2265-225 / 2265-193Fax: (593-2) 2459-031,
EGYPT	**Cairo**	Egyptian International Motors CO. Ltd (EIM)Autostrade RoadAl-Mugattam, CairoEgyptTelephone: (20-2) 5061600 / 1 / 2Fax: (20-2) 5065620,
EL SALVADOR	**San Salvador**	Maquinaria Salvadoreña, S.A. de C.V.Blvd. Ejercito Nacional y 54 Ave. Norte Edificio MAQSA San SalvadorEl SalvadorEl SalvadorTelephone: (503) 2293-1666Fax: (503) 2293-1656,
ENGLAND		- See United Kingdom ,
ENGLAND		Cummins UKRutherford DrivePark Farm SouthWellingborough, NorthantsZIP / Postal Code: NN8 6ANUnited KingdomTelephone: (44-1933) 334200Fax: (44-1933) 334198,
EQUATORIAL GUINEA		- See North/West/East and Central Africa Regional Office - Daventry ,
EQUATORIAL GUINEA		Cummins Engine Company LtdRoyal Oak Way SouthDaventry, NorthantsZIP / Postal Code: NN11 5NUUnited KingdomTelephone: (44-1327) 886000Fax: (44-1327) 886106,
ESTONIA		Cummins Czech Republic s.r.o.Komercni zona Pruhonice CestliceObchodni 132Praha, Prague 251 01Czech RepublicTelephone: (420-272) 680 110Fax: (420-272) 680 090,
FAROE ISLANDS	**Wellingborough (Office in United Kingdom)**	Cummins UKRutherford Drive Park Farm SouthWellingborough, Northants NN8 6ANEngland Telephone: (44-1933) 334200Fax: (44-1933) 334198,
FERNANDO PO		- See Spain ,
FERNANDO PO		Cummins Ventas y Servico S. A.Torrelaguna 56Madrid 28027SpainTelephone: (34-91) 367 20 00 / 367 24 04Fax: (34-91) 407 66 04,

Downloaded from www.Manualslib.com manuals search engine

FIJI		- See Cummins New Zealand,
FIJI		Cummins9 Langley RoadManukau City Centre, Auckland 1702New ZealandTelephone: (64-3) 277 1000Fax: (64-3) 277 1001,
FINLAND	**Helsinki**	Machinery OyAnsatie 5VantaaZIP / Postal Code: FIN-01741FinlandTelephone: (358-9) 89551,
FRANCE	**Lyon**	CUMMINS DIESEL S.A.39 rue Ampère BP 190Chassieu cédex 69680 FranceTelephone: (33-4) 72 22 92 72 Fax: (33-4) 78 90 19 56,
GABON		- See North/West/East and Central Africa Regional Office - Daventry ,
GAMBIA		Matforce10 Avenue FaidherbeDakarSenegalTelephone: (221-8) 399500Fax: (221-8) 399531 / 399550,
GEORGIA		- See Moscow Regional Office - Moscow ,
GEORGIA		Cummins Engine Company, Inc.Park PlaceOffice E708, 113/1 Leninskiy ProspectMoscowZIP / Postal Code: 117198RussiaTelephone: (7-495) 956-51-22 / 23Fax: (7-495) 956-53-62,
GERMANY	**Gross-Gerau**	Cummins Diesel Deutschland GmbHOdenwaldstraße 23Groß-Gerau, Hessen 64521 GermanyTelephone: (49-6152) 174-0 Fax: (49-6152) 174-141,
GHANA	**Accra**	J&D Diesels and SystemsP.O. Box c2381CantonmentsAccra, Ghana Telephone: (233-21) 30-14-51Fax: (233-21) 301 201,
GREECE	**Athens**	ERGOTRAK Industrial Machinery & Equipment Trading Company14 km. National Road of Athens-LamiaKifissia 14510GreeceTelephone: (30-210) 6293400 / 41Fax: (30-210) 6201845,
GREENLAND		- See DenmarkCummins Diesel Salg & Service A/SHovedvejen 233B, OstedRoskilde 4000Denmark Telephone: (45-46) 42 35 50Fax: (45-46) 42 30 50,
GRENADA	**Miami (Office in U.S.A.)**	Cummins Power South, LLC 9900 N W 77th Ave. Hialeah Gardens, Florida 33016Telephone: (305) 821-4200Fax: (305) 557-2992,
GUADELOUPE	**Miami (Office in U.S.A.)**	Cummins Power South, LLC 9900 N W 77th Ave.Hialeah Gardens, Florida 33016Telephone: (305) 821-4200Fax: (305) 557-2992,
GUAM	**Barrigada**	Mid-Pac Far East, Inc. Airport Industrial Park 825 Tiyan Parkway Barrigada, Guam 96931Telephone: (671) 632-5160Fax: (671) 632-5186,
GUATEMALA	**Guatemala City**	Maquinaria y Equipos, S.A. Carretera a Amatitlan, Kilómetro 12, Zona 12, Guatemala City GuatemalaGuatemala Telephone: (502) 2477-2746 / 2477-2747 / 2477-2748 / 2477-2749 / 2477-2750Fax: (502) 2477-3929 ,

Downloaded from www.Manualslib.com manuals search engine

GUINEA	**Mechelen (Office in Belgium)**	Cummins Belgium N.V./S.A.Egide Walschaertsstraat, 2Industriepark ZuidMechelen 2800BelgiumTelephone: (32-15) 479 100Fax: (32-15) 275 686,
GUINEA BISSAU		- See North/West/East and Central Africa Regional Office - DaventryCummins Engine Company LtdRoyal Oak Way SouthDaventry, Northants NN11 5NUUnited KingdomTelephone: (44-1327) 886000Fax: (44-1327) 886106,
GUYANA	**Miami (Office in U.S.A.)**	Cummins Power South, LLC 9900 N.W. 77 Court Hialeah Gardens, FL 33016 Telephone: (305) 821-4200 Fax: (305) 557-2992,
GUYANA, FRENCH	**See France**	CUMMINS DIESEL S.A.39 rue AmpèreBP 190Chassieu cédex 69680FranceTelephone: (33-4) 72 22 92 72Fax: (33-4) 78 90 19 56,
HAITI	**Miami (Office in U.S.A.)**	Cummins Power South, LLC9900 N W 77th Ave.Hialeah Gardens, FL 33016 Telephone: (305) 821-4200 Fax: (305) 557-2992,
HOLLAND	**- See Netherlands**	Cummins Holland B VGalvanistraat 35Dordrecht, Zuid-Holland 3316 GHNetherlandsTelephone: (31-78) 6181200Fax: (31-78) 6176579,
HONDURAS	**Tegucigalpa**	Comercial Laeisz Honduras, S.A.Desvio Colonia La Pradera,Blvd. ToncontinTegucigalpaHondurasTelephone: (504) 233-5615 / 234-7072Fax: (504) 233-9531 / 234-3718,
HONG KONG	**Kowloon**	Cummins Hong Kong Ltd.2/F Unison Industrial Centre27-31 Au Pui Wan Street, Fo Tan, Shatin, N.T.Hong Kong, Hong KongHong Kong S.A.R.ong Kong Telephone: (852) 2606-5678 Fax: (852) 2691-1641,
ICELAND	**Velasalan H.F.**	Ananaustrum 1Reykjavik 121 IcelandTelephone: (354) 5526122Fax: (354) 580 5301,
INDIA	**Pune**	Cummins Diesel Sales & Service (India) Ltd 35A/1/2, Erandawana Pune, Maharashtra 411038 Telephone: (91-20)25431234 , 25430666, 25431703Fax: (91-20) 25439490,
INDIA	**Kolkata**	Cummins Diesel Sales & Service (India) Ltd94, Tivoli Court, 1/C Ballygunge Circular RoadKolkata, West Bengal 700019India Telephone: (91-33) 22472481 / 22470774 / 22478065Fax: (91-33) 22473833,
INDIA	**New Delhi**	Cummins Diesel Sales & Service (India) Ltd.911-912, Hemkunt Tower,98 Nehru Place New Delhi, Delhi 110019IndiaTelephone: (91-11) 26431051 / 26445756 / 26445759 / 26416947Fax: (91-11) 26212817,
INDIA	**Raipur**	Cummins Diesel Sales & Service (India) Ltd.Vanijya Bhavan' 1st Floor, Sai Nagar FafadihDevendra Nagar RoadRaipur, Madhya Pradesh 492009IndiaTelephone: (91-771) 2521101 / 2521102Fax: (91-771) 2521103,

Downloaded from www.Manualslib.com manuals search engine

INDIA	**Ranchi**	Cummins Diesel Sales & Service (India) Ltd.`Shanti Kunj' C-202, Vidyalaya Marg Road No. 01, Ashok Nagar,Ranchi, Jharkhand 834002India Telephone: (91-651) 2241948 / 2241521Fax: (91-651) 2242815,
INDONESIA	**Jakarta**	P.T. Alltrak 1978 J1. R.S.C. Veteran No. 4 Bintaro, Rempoa Jakarta 12330 IndonesiaTelephone: (62-21) 736-1978 / 3301 / 5085Fax: (62-21) 736-1977 / 3302,
IRAQ		- See Middle East Regional Office or United Arab Emirates,
IRAQ		Cummins Emirates Sales & Service LLCP.O. Box No 54044Al Quoz Industrial Estate, DubaiUnited Arab EmiratesTelephone: 00 9714 3478184Fax: 00 9714 3478185Toll Free: 800 4184 ,
IRELAND	**Wellingborough (Office inEngland)**	Cummins UKRutherford DrivePark Farm SouthWellingborough, Northants NN8 6ANUnited KingdomTelephone: (44-1933) 334200Fax: (44-1933) 334198,
ISRAEL	**Tel Aviv**	Israel Engines & Trailers 33 Hahashmal StreetTel Aviv 61003IsraelTelephone: (972-3) 7106222Fax: (972-3) 5604540,
ITALY	**Milan**	Cummins Italia S.p.A.Via Einaudi, 5Peschiera Borromeo, Milano 20068ItalyTelephone: (39-02) 51 65 581Fax: (39-02) 51 65 58 56 ,
IVORY COAST		- See Cote d' IvoireSte. des Ets. Lemercier et Fils10 rue des BrasseursAbidjan 15Cote d'IvoireCote d'IvoireTelephone: (225-21) 352522 / 350687 / 350676Fax: (225-21) 358562 / 243938,
JAMAICA		Cummins Power South, LLC9900 N W 77th Ave.Hialeah Gardens, FL 33016 Telephone: (305) 821-4200Fax: (305) 557-2992,
JAPAN	**Tokyo**	Cummins Japan Ltd.2-11, Higashi-Kojiya 6-chomeOta-ku, Tokyo 144-0033Japan Telephone: (81-3) 5735-0600Fax: (81-3) 5735-0605,
JORDAN	**Amman**	SETI Jordan Ltd.Bayader Wadi AlseerIndustrial StreetAmman, JordanJordanTelephone: (962-6) 582 7300 / 4261Fax: (962-6) 585 6854,
KENYA	**Nairobi**	Simba Colt Motors LtdCummins Engine Division, PO Box 48296, Code 00100Shimo-La-Tewa Road,NairobiKenyaTelephone: (254-20) 650029Fax: (254-20) 534870 ,
KOREA - SOUTH KOREA	**Seoul**	Cummins Diesel Sales & Service Co., Ltd. 354-4, Chonheung-ri, Songgo-eupChonan-city, Choongchungnam-do 330-836South Korea Telephone: (82-41) 620-9202/3Fax: (82-41) 621-9121 to 2,
KOREA - SOUTH KOREA		Cummins Korea Ltd2nd Floor, Choyang Bldg.113 Samsung Dong, Kangnam-kuSeoul, KoreaTelephone: (82-2) 3420-0901Fax: (82-2) 3452-4113 / 539-6569,

Downloaded from www.Manualslib.com manuals search engine

KUWAIT	**Kuwait**	General Transportation & Equipment Co. (GTE)(Sales Department) Safat 13011KuwaitTelephone: (965) 483 3380/1/2Fax: (965) 481 2860,
LAOS		Diethelm & Co. LtdBan Phonsinouan, Unit 18,New Road Sisattanak District,VientianeLaos P.D.R.Telephone: (856-21) 453 100Fax: (856-21) 453-103,
LATVIA	**Please contact the Central & Eastern European Regional Office**	Cummins Diesel Deutschland GmbHOdenwaldstraße 23Groß-GerauZIP / Postal Code: 64521GermanyTelephone: (49-6152) 174-0Fax: (49-6152) 174-141,
LEBANON	**Beirut**	S.E.T.I. Charles Keller SALCorniche du Fleuve BeirutLebanonLebanonTelephone: (961-1) 425040 / 425041 / 426042Fax: (961-1) 425637 / 425389,
LESOTHO	**- See South Africa**	Cummins Diesel South Africa (Pty) Ltd13 Eastern Service RoadKelvin (Neighbourhood), AlexandraGauteng, South Africa 2054South AfricaTelephone: (27-11) 321 8700Fax: (27-11) 444 2012,
LIBYA	**- See North/West Africa Regional Office - Daventry**	Cummins Engine Company LtdRoyal Oak Way SouthDaventry, Northants NN11 5NUUnited KingdomTelephone: (44-1327) 886000Fax: (44-1327) 886106,
LIECHTENSTEIN	**- See Switzerland**	AKSA Wurenlos AGGrosszelgstrasse 15Wuerenlos CH-5436SwitzerlandTelephone: (41-56) 436 77 00Fax: (41-56) 436 77 19,
LUXEMBOURG		Cummins Diesel Deutschland GmbH Odenwaldstraße 23Groß-Gerau, Hessen 64521GermanyTelephone: (49-6152) 174-0Fax: (49-6152) 174-141,
MACAU	**- See Hong Kong**	Cummins Hong Kong Ltd.2/F Unison Industrial Centre27-31 Au Pui Wan Street, Fo Tan, Shatin, N.T.ccccHong Kong, Hong KongHong Kong S.A.R.Telephone: (852) 2606-5678Fax: (852) 2691-1641,
MADAGASCAR	**- See Southern Africa Regional Office**	Cummins Diesel South Africa (Pty) Ltd13 Eastern Service RoadKelvin (Neighbourhood), AlexandraGauteng, South Africa 2054ZIP South AfricaTelephone: (27-11) 321 8700Fax: (27-11) 444 2012,
MADEIRA ISLANDS	**- See Portugal**	Electro Central Vulcanizadora, LdaRua Conselheiro Martins de CarvalhoLote 1480 Restelo Lisbon 1400PortugalTelephone: (351-21) 3034800Fax: (351-21) 3034801 / 2,
MALAYSIA	**Kuala Lumpur**	Scott & English (M) Sdn Bhd 12 Jalan U1/15, Seksyen U1 Hicom-Glenmarie Industrial ParkShah Alam, Selangor Darul Ehsan 40150MalaysiaTelephone: (60-3) 7805-1111Fax: (60-3) 7803-5122,
MALI	**- See Senegal (Matforce)**	Matforce10 Avenue FaidherbeDakarSenegalTelephone: (221-8) 399500Fax: (221-8) 399531 / 399550,

Downloaded from www.Manualslib.com manuals search engine

MALTA	**Valletta**	International Machinery LtdRegency House254 Republic Street Valletta, MaltaMaltaTelephone: (356-21) 232620 / 233343Fax: (356-21) 235484 / 247571,
MARTINIQUE		Cummins Power South, LLC9900 N.W. 77 Ave.Hialeah Gardens, FL 33016 Telephone: (305) 821-4200Fax: (305) 557-2992,
MEXICO	**Guadalajara**	Distribuidora Megamak de OccidenteMetalurgia No. 2980 Fracc. Alamo IndustrialGuadalajara, Jalisco 45560MexicoTelephone: (52-3) 666-0329 / 666-0383Fax: (52-3) 666-0333,
MEXICO	**Monterrey**	Converto Dexel Monterrey Privada Nazry Hasbun #2, Carr. Migue Aleman 14.8Parque Industrial HasnaApodaca, Nuevo León 66473MexicoTelephone: (52-81) 81310200Fax: (52-81) 81310200,
MEXICO	**Merida**	Distribuidora Megamak del SuresteAv. Aviacion Civil No. 647Col. Sambula Merida, Yucatan 97259MexicoTelephone: (52-9) 930-1300Fax: (52-9) 930-1315,
MEXICO	**Puebla**	Cummins De Oriente, S.A. de C.V. Km. 10+400 Carr. Fed. Puegla-TlaxcalaPuebla, Puebla 72100Mexico Telephone: (52-2) 248-7674 / 5 / 30-5083 / 6Fax: (52-2) 249-7679,
MEXICO	**Queretaro**	Converto Dexel QueretaroBlvd. Bernardo Quintana No. 518, Col. ArboledasQueretaro, Queretaro ZIP / Postal Code: 76140Mexico Telephone: (52-442) 211-8700Fax: (52-442) 211-8700,
MOROCCO	**Casablanca**	Groupe Auto Hall44 avenue Lalla YacoutCasablancaMoroccoTelephone: (212-22) 442121 / 317044 / 317052Fax: (212-22) 318915 / 315633,
MOZAMBIQUE	**- See Southern Africa Regional Office - Kelvin**	Cummins Diesel South Africa (Pty) Ltd13 Eastern Service RoadKelvin (Neighbourhood), AlexandraGauteng, South Africa 2054South AfricaTelephone: (27-11) 321 8700Fax: (27-11) 444 2012,
NEPAL	**Pune (Office in India)**	Cummins Diesel Sales &Service (India) Ltd. 35A/1/2, Erandawana Pune, Maharashtra 411038IndiaTelephone: (91-20) 25431234 / 25430666 / 25431703Fax: (91-20) 25439490,
NETHERLANDS	**Dordrecht**	Cummins Holland B V Galvanistraat 35 Dordrecht, Zuid-Holland 3316 GHNetherlandsTelephone: (31-78) 6181200Fax: (31-78) 6176579,
NETHERLANDS ANTILLES		Cummins Power South, LLC 9900 N W 77th Ave.Hialeah Gardens, FL 33016 Telephone: (305) 821-4200Fax: (305) 557-2992,
NEW GUINEA	**- See Papua New Guinea**	CumminsMacdhui StreetLaePapua New GuineaTelephone: (675) 472 3699Fax: (675) 472 3803,

Downloaded from www.Manualslib.com manuals search engine

NEW GUINEA	**- See Papua New Guinea**	CumminsMacdhui StreetLaePapua New GuineaTelephone: (675) 472 3699Fax: (675) 472 3803,
New Zealand	**Auckland**	Cummins9 Langley RoadManukau City Centre, South Auckland 1702 New Zealand Telephone: (64-9) 277 1000Fax: (64-9) 277 1001,
New Zealand	**Christchurch**	Cummins33 Parkhouse RoadChristchurchNew ZealandTelephone: (64-3) 348 8170Fax: (64-3) 348 8007,
New Zealand	**Dunedin**	Cummins8 Devon StreetDunedinNew ZealandTelephone: (64-3) 477 8818Fax: (64-3) 477 8061,
New Zealand	**Palmerston North**	Cummins852 - 860 Tremaine AvenuePalmerston North, Wanganui-Manawatu 5301New ZealandTelephone: (64-3) 356 2209Fax: (64-3) 356 9130,
New Zealand	**Rotorua**	Cummins328 Te Ngae RoadBay of PlentyRotoruaNew ZealandTelephone: (64-7) 345 6699Fax: (64-7) 345 6694,
NICARAGUA	**Managua**	F. Alf. Pellas, S.A.Gadala Maria Cuatro Cuadras OesteBarrio AcahualincaManagua, NicaraguaNicaraguaTelephone: (505) 268-2244Fax: (505) 266-1060,
NIGERIA	**Lagos**	Scoa Power (A Division of Scoa Nigeria Plc) 15, Creek RoadApapaLagosNigeriaTelephone: (234-1) 5873623 / 5877322Fax: (234-1) 5450646,
NIGERIA	**Paris (Office in France)**	SCOA InterImmeublearie JosepheRue du Marechal de Lattre de Tassigny78990 Elancourt, FranceFrance Telephone: (33-1) 30 688 268Fax: (33-1) 30 688 269,
NORTHERN IRELAND	**- See United Kingdom**	Cummins Engine Company LtdRoyal Oak Way SouthDaventry, NorthantsZIP / Postal Code: NN11 5NUUnited Kingdom Telephone: (44-1327) 886000Fax: (44-1327) 886106,
NORWAY	**Oslo**	Cummins Norway A SHestehagen 3 Postboks 151 Drobak 1441Norway Telephone: (47) 64 90 70 80Fax: (47) 64 90 70 90,
OMAN	**Ruwi**	Universal Engineering Services LLCPO Box 2688Ruwi 112OmanTelephone: (968) 597531 / 597537Fax: (968) 597514,
PAKISTAN	**Karachi**	Cummins Sales & Service Pakistan2 Bangalore Town Main Shahrah-e-Faisal Karachi 75350 Pakistan Telephone: +92-21-4539603 / 4539604/ 4539605Fax: +92-21-4532519,
PANAMA	**Panama City**	Grupo Tiesa, S.A. Via Transistmica Milla 8 Frente a BacardiPartilloPanama Panama Telephone: (507) 231-0266Fax: (507) 231-2535,
PARAGUAY	**Asuncion**	De La Sobera S.A.Eusebio Ayala 1947P.O. Box 1160 AsuncionParaguay Telephone: (595) 21 202 913,

Downloaded from www.Manualslib.com manuals search engine

PERU	**Lima**	Mitsui Maquinarias Peru, S.A.Av. Nicolas Ayllon 2648Parcela Rustica Sta. Angelica AteLima ZIP / Postal Code: 03PeruTelephone: (51-1) 326-4957Fax: (51-1) 326-4954,
PHILIPPINES	**EDSA**	Cummins Sales & Service Philippines, Inc.Lot 1 & 2, Block 15, LIIP Avenue,Laguna International Industrial Park, Mamplasan, BinanLagunaPhilippinesTelephone: (63-2) 843-0630 Fax: (63-2) 539-0290,
POLAND		Cummins Engine Company Limited Sp. z.o.o. Oddzial w Polsceul. Stawowa 119Krakow 31-346Poland Telephone: (48-12) 661 53 05 & (48-12) 661 53 25Fax: (48-12) 661 53 15,
PORTUGAL	**Lisbon**	Electro Central Vulcanizadora, Lda Rua Conselheiro Martins de CarvalhoLisbonZIP / Postal Code: 1400PortugalTelephone: (351-21) 3034800Fax: (351-21) 3034801 / 2,
QATAR	**Doha**	Jaidah Motors & Trading Co. P.O. Box 150 Doha, Qatar (Arabian Gulf) Telephone: (974) 4466888Fax: (974) 441 4100 / 441 5400,
REUNION	**- See Lyon Regional Office - Lyon**	CUMMINS DIESEL S.A.39 rue AmpèreBP 190Chassieu cédex 69680FranceTelephone: (33-4) 72 22 92 72Fax: (33-4) 78 90 19 56,
RIO DE ORO	**- See Spain**	Cummins Ventas y Servico S. A.Torrelaguna 56Madrid 28027SpainTelephone: (34-91) 367 20 00 / 367 24 04Fax: (34-91) 407 66 04,
ROMANIA	**- See Germany Regional Office - Gross-Gerau**	Cummins Diesel Deutschland GmbHOdenwaldstraße 23Groß-Gerau, Hessen 64521GermanyTelephone: (49-6152) 174-0Fax: (49-6152) 174-141,
RUSSIA		OOO CumminsKlyazma 1GKhimki Disctrict, Moscow Region 141400RussiaTelephone: (7-495) 540 86 24 / 25Fax: (7-495) 540 86 99,
RWANDA	**Mechelen**	Cummins Belgium N.V./S.A. Egide Walschaertsstraat, 2Industriepark ZuidMechelen 2800BelgiumTelephone: (32-15) 479 100Fax: (32-15)275 686,
ST. LUCIA		Cummins Power South, LLC9900 N W 77th Ave.Hialeah Gardens, FL 33016 Telephone: (305) 821-4200Fax: (305) 557-2992,
ST. LUCIA	**Miami (Office in U.S.A.)**	Cummins Power South, LLC 9900 N W 77th Ave.Hialeah Gardens, FL 33016 Telephone: (305) 821-4200Fax: (305) 557-2992,
SAN MARINO	**- See Italy**	Cummins Italia S.p.A.ItalyVia Einaudi, 5Peschiera Borromeo, Milano 20068Telephone: (39-02) 51 65 581Fax: (39-02) 51 65 58 56 ,
SAO TOME AND PRINCIPE	**- See North/West/East and Central Africa Regional Office - Daventry, England**	Cummins Engine Company LtdRoyal Oak Way SouthDaventry, NorthantsZIP / Postal Code: NN11 5NUUnited KingdomTelephone: (44-1327) 886000Fax: (44-1327) 886106,

Downloaded from www.Manualslib.com manuals search engine

SAUDI ARABIA	**Al-Khobar**	General Contracting Company - OLAYANP.O. Box 356 King Abdul Aziz Road Al-KhobarSaudi Arabia Telephone: (966-3) 882-0888Fax: (966-3) 8828560 / 8827914,
SCOTLAND	**- See United Kingdom**	Cummins UKRutherford DrivePark Farm SouthWellingborough, NorthantsZIP / Postal Code: NN8 6ANUnited KingdomTelephone: (44-1933) 334200Fax: (44-1933) 334198,
SENEGAL	**Dakar**	Matforce 10 Avenue FaidherbeDakarSenegal Telephone: (221-8) 399500 Fax: (221-8) 399531/399550 Equipements et Services (Mining Only) BP 15372-Fann Dakar Senegal Contacts: Mr. Jean Smets Tel: (221-8) 60 77 76 & 24 73 62 Fax: (221-8) 60 95 98,
SEYCHELLES	**- See North/West/East & Central Africa Regional Office - Daventry, England**	Cummins Engine Company LtdRoyal Oak Way SouthDaventry, NorthantsZIP / Postal Code: NN11 5NUUnited KingdomTelephone: (44-1327) 886000Fax: (44-1327) 886106,
SIERRA LEONE	**- See North/West/East and Central Africa Regional Office - Daventry**	Cummins Engine Company LtdRoyal Oak Way SouthDaventry, NorthantsZIP / Postal Code: NN11 5NUUnited KingdomTelephone: (44-1327) 886000Fax: (44-1327) 886106,
SINGAPORE	**Singapore**	Cummins Engine (Singapore) Pte Ltd8 Tanjong Penjuru Singapore 609019SingaporeTelephone: (65) 6261-3555Fax: (65) 6261-2405,
SLOVAKIA		- See European Regional Office - Gross-Gerau,
SOLOMON ISLANDS	**The Czech branch covers sales and service for the Czech Republic and Slovakia**	Cummins Czech Republic s.r.o.Komercni zona Pruhonice CestliceObchodni 132Praha, Prague 251 01Czech RepublicTelephone: (420-272) 680 110Fax: (420-272) 680 090,
SOLOMON ISLANDS	**-See SOUTH PACIFIC ISLANDS**	(Please contact) Cummins2 Caribbean DriveScoresby 3179VictoriaTelephone: (61-3) 9765-3222Fax: (61-3) 9763-0079,
SOMALIA	**- see Southern Africa Regional Office**	(Please contact) Cummins Diesel South Africa (Pty) Ltd13 Eastern Service RoadKelvin (Neighbourhood), AlexandraGauteng, South Africa 2054South AfricaTelephone: (27-11) 321 8700Fax: (27-11) 444 2012,
SOUTH AFRICA	**Johannesburg**	Cummins Diesel South Africa (Pty) Ltd 13 Eastern Service Road Kelvin (Neighbourhood), AlexandraGauteng, South Africa 2054South Africa Telephone: (27-11) 321 8700Fax: (27-11) 444 2012 ,
SOUTHWEST AFRICA	**- see Southern Africa Regional Office**	(Please contact) Cummins Diesel South Africa (Pty) Ltd13 Eastern Service RoadKelvin (Neighbourhood), AlexandraGauteng, South Africa 2054South AfricaTelephone: (27-11) 321 8700Fax: (27-11) 444 2012 ,
SPAIN	**Madrid**	Cummins Ventas y Servico S. A.Torrelaguna, 56 Madrid 28027Spain Telephone: (34-91) 367 20 00 / 367 24 04Fax: (34-91) 407 66 04,

Downloaded from www.Manualslib.com manuals search engine

SPANISH GUINEA	**- See Spain**	Cummins Ventas y Servico S. A.Torrelaguna, 56 Madrid 28027Spain Telephone: (34-91) 367 20 00 / 367 24 04Fax: (34-91) 407 66 04,
SRI LANKA	**Colombo**	Trade Promoters Ltd 272/25, Sudharshana MawathaMalabe Sri Lanka Telephone: (94-11) 2413002Fax: (94-11) 5550034,
SUDAN	**- See Middle East Regional Office - United Arab Emirates**	United Arab EmiratesCummins Middle East FZEUnits ZF 5/6Jebel Ali Free ZoneP.O.Box No 17636DubaiUnited Arab EmiratesTelephone: (971-4) 883 8998Fax: (971-4) 883 7971,
SURINAM		Cummins Power South, LLC9900 N W 77th Ave.Hialeah Gardens, FL 33016 Telephone: (305) 821-4200Fax: (305) 557-2992,
SWAZILAND	**- See South Africa**	Cummins Diesel South Africa (Pty) Ltd13 Eastern Service RoadKelvin (Neighbourhood), AlexandraGauteng, South AfricaZIP / Postal Code: 2054South AfricaTelephone: (27-11) 321 8700Fax: (27-11) 444 2012,
SWEDEN	**Stockholm**	Cummins Sweden Maskingata 17CBrista IndustriomadeMärsta, Stockholm 195 60Sweden Telephone: (46-8) 595 133 90Fax: (46-8) 595 133 99,
SWITZERLAND	**Regensdorf**	AKSA Wurenlos AGGrosszelgstrasse 15Wuerenlos CH-5436Switzerland Telephone: (41-1) 436 77 00Fax: (41-56) 436 77 19,
SYRIA	**Damascus**	Puzant Yacoubian & Sons Yacoubian BuildingAbou Baker El Saddik StreetDamascusSyriaTelephone: (963-11) 212 8600Fax: (963-11) 212 8611,
TAHITI, ISLAND OF	**- See French Polynesia**	Cummins MerCruiser Diesel245 Brisbane RoadBiggera Waters, Queensland 4216AustraliaTelephone: (61-7) 5500 9060Fax: (61-7) 5500 9070,
TAIWAN		Cummins Taiwan Pte. Ltd.No.49 Ting Hu RoadTkuei Shan HsiangTaoyuan, Taiwan 104TaiwanTelephone: (886-3) 211-5160Fax: (886-2) 211-4158,
TANZANIA	**- See South African Regional Office - Kelvin, South Africa**	Cummins Diesel South Africa (Pty) Ltd13 Eastern Service RoadKelvin (Neighbourhood), AlexandraGauteng, South AfricaZIP / Postal Code: 2054South AfricaTelephone: (27-11) 321 8700Fax: (27-11) 444 2012,
THAILAND	**Bangkok**	DKSH (Thailand) Ltd1696 New Petchburi Road Bangkok 10310Thailand Telephone: (66-2) 254-4900 / 454-2173Fax: (66-2) 253-5560 / 652-9417 / 8 / 9,
TOGO (and BENIN)	**Lome**	TOGOMAT s.a.Zone Industrielle CNPPMELomeTogo Telephone: (228) 2272395Fax: (228) 2270310,
TONGA, ISLAND OF	**-See SOUTH PACIFIC ISLANDS**	(Please contact) Cummins2 Caribbean DriveScoresby 3179VictoriaAUSTRALIATelephone: (61-3) 9765-3222Fax: (61-3) 9763-0079,
TRINIDAD and TOBAGO		Cummins Power South, LLC 9900 N W 77th Ave.Hialeah Gardens, FL 33016 Telephone: (305) 821-4200Fax: (305) 557-2992,

Downloaded from www.Manualslib.com manuals search engine

TURKEY	**Istanbul**	Hamamcioglu Muesseseleri Ticaret T.A.S. Okul Cad. No. 1334956 Orhanli - P.K. 62 TuzlaIstanbulTurkey Telephone: (90-216) 394 3210Fax: (90-216) 394 3208 / 9,
UKRAINE	**- See Moscow Regional Office - Moscow**	Cummins Engine Company, Inc.Park PlaceOffice E708, 113/1 Leninskiy ProspectMoscow 117198RussiaTelephone: (7-495) 956-51-22 / 23 Fax: (7-495) 956-53-62 ,
UNITED ARAB EMIRATES	**Dhabi**	Cummins Middle East FZE Units ZF 05&06Jebel Ali Free ZoneDhabiUnited Arab Emirates Telephone: (971-4) 883 8998Fax: (971-4) 883 7971,
UNITED KINGDOM	**Wellingborough**	Cummins UKRutherford DrivePark Farm SouthWellingborough, Northants NN8 6ANUnited Kingdom Telephone: (44-1933) 334200Fax: (44-1933) 334198,
VATICAN CITY	**- See Italy**	Cummins Italia S.p.A.Via Einaudi, 5Peschiera Borromeo, Milano 20068ItalyTelephone: (39-02) 51 65 581Fax: (39-02) 51 65 58 56 ,
VENEZUELA	**Caracas**	Dieselval, C.A.Ave. Lisandro Alvarado, Sector La FloridaEdificio DieselvalValencia, CaraboboVenezuela ZIP / Postal Code: VenezuelaVenezuelaTelephone: (58-241) 8353074 / 8355265Fax: (58-241) 8314553 / 8314818,
VIETNAM	**Hanoi**	Diethelm & Co. Ltd., Engrg.94, Tran Quoc Toan Street,Hoan Kiem DistrictHanoiVietnam Telephone: (84-4) 9424-725Fax: (84-4) 9424-730,
VIETNAM	**Ho Chi Minh City**	Diethelm & Co. Ltd., Engrg.189 Dien Bien Phu Street, Ward 15Binh Thanh DistrictHo Chi Minh City, S.R. Vietnam Telephone: (84-8) 5121-334Fax: (84-8) 5121-335,
WESTERN SAMOA	**-See SOUTH PACIFIC ISLANDS**	(Please contact) Cummins2 Caribbean DriveScoresby 3179VictoriaAUSTRALIATelephone: (61-3) 9765-3222Fax: (61-3) 9763-0079,
YEMEN	**Sana'a**	Zubieri Trading CompanyAl Qiyadah StreetSana'aRepublic of YemenTelephone: (967-1) 223943 / 224051Fax: (967-1) 221611 / 245838,
SERBIA & MONTENEGRO		Cummins Dizel Motori Prodaja i ServisAutoput, 2211080 ZemumBeograd, Serbia & MontenegroSerbia & MontenegroTelephone: (381-11) 314 90 71Fax: (381-11) 314 91 27,
ZAMBIA	**Ndola**	Cummins Zambia LtdLufunza AvenueNdola, ZambiaZambiaTelephone: (260-2) 610 729Fax: (260-2) 612 756,
ZIMBABWE	**Harare**	Cummins Zimbabwe (Pvt) Ltd. 72 Birmingham RoadSoutherton, ZimbabweZimbabwe Telephones: (263-4) 621871 / 2 / 3 / 4 / 5Fax: (263-4) 621880,

Downloaded from www.Manualslib.com manuals search engine

Section ES - Engine Storage

Section Contents

Page
Engine Storage - Long Term ES-1
General Information........ES-1

Downloaded from www.Manualslib.com manuals search engine

This Page Left Intentionally Blank

Downloaded from www.Manualslib.com manuals search engine

Engine Storage - Long Term

General Information

If the engine will be out of service longer than 6 months, special precautions **must** be taken. Follow the long term storage procedure in the base engine troubleshooting and repair manual or service manual or contact the nearest Cummins® Authorized Repair Location for additional information.

Downloaded from www.Manualslib.com manuals search engine

Notes

Downloaded from www.Manualslib.com manuals search engine

Section TS - Troubleshooting Symptoms

Section Contents

Page
Troubleshooting Procedures and Techniques TS-1
General Information....TS-1
Troubleshooting Symptoms Charts TS-2
General Information....TS-2
Air Compressor Air Pressure Rises Slowly TS-3
Air Compressor Cycles Frequently....TS-4
Air Compressor Noise is Excessive....TS-5
Air Compressor Pumping Excess Lubricating Oil into the Air System TS-6
Air Compressor Will Not Maintain Adequate Air Pressure (Not Pumping Continuously)....TS-8
Air Compressor Will Not Stop Pumping....TS-9
Alternator Not Charging or Insufficient Charging.... TS-10
Alternator Overcharging....TS-11
Coolant Loss - External....TS-12
Coolant Temperature Above Normal - Gradual Overheat....TS-13
Coolant Temperature Above Normal - Sudden Overheat....TS-16
Coolant Temperature Below Normal....TS-18
Cranking Fuel Pressure is Low....TS-19
Engine Acceleration or Response Poor....TS-20
Engine Difficult to Start or Will Not Start (Exhaust Smoke)....TS-22
Engine Difficult to Start or Will Not Start (No Exhaust Smoke)....TS-24
Engine Noise Excessive....TS-25
Engine Noise Excessive — Combustion Knocks....TS-27
Engine Power Output Low.... TS-28
Engine Runs Rough at Idle....TS-30
Engine Runs Rough or Misfires.... TS-31
Engine Shuts Off Unexpectedly or Dies During Deceleration....TS-32
Engine Speed Surges at Low or High Idle....TS-33
Engine Speed Surges in PTO or Cruise Control....TS-35
Engine Speed Surges Under Load or in Operating Range....TS-34
Engine Starts But Will Not Keep Running....TS-36
Engine Vibration Excessive....TS-37
Engine Will Not Crank or Cranks Slowly (Air Starter).... TS-38
Engine Will Not Crank or Cranks Slowly (Electric Starter)....TS-39
Engine Will Not Reach Rated Speed (RPM)....TS-40
Fault Code Warning Lamps Do Not Illuminate....TS-42
Fault Code Warning Lamps Stay On (No Apparent Reason).... TS-41
Fuel Consumption Excessive....TS-43
Fuel in Coolant....TS-44
Fuel in the Lubricating Oil.... TS-45
Intake Manifold Air Temperature Above Specification....TS-46
Intake Manifold Pressure (Boost) is Below Normal....TS-48
Lubricating Oil Consumption Excessive....TS-49
Lubricating Oil Contaminated....TS-50
Lubricating Oil Pressure High.... TS-51
Lubricating Oil Pressure Low....TS-52
Lubricating Oil Sludge in the Crankcase Excessive....TS-54
Smoke, Black — Excessive.... TS-55
Smoke, White — Excessive....TS-56
Turbocharger Leaks Engine Oil or Fuel....TS-57

Downloaded from www.Manualslib.com manuals search engine

This Page Left Intentionally Blank

Downloaded from www.Manualslib.com manuals search engine

Troubleshooting Procedures and Techniques

General Information

This guide describes some typical operating problems, their causes, and some acceptable corrections to those problems. Unless noted otherwise, the problems listed are those which an operator can diagnose and repair.

WARNING

Performing troubleshooting procedures NOT outlined in this section can result in equipment damage or personal injury or death. Troubleshooting must be performed by trained, experienced technicians. Consult a Cummins Authorized Repair Location for diagnosis and repair beyond that which is outlined, and for symptoms not listed in this section. Before beginning any troubleshooting, refer to General Safety Instructions in Section i of this manual.

Follow the suggestions below for troubleshooting:

- Study the complaint thoroughly before acting
- Refer to the engine system diagrams
- Do the easiest and most logical things first
- Find and correct the cause of the complaint

Downloaded from www.Manualslib.com manuals search engine

Troubleshooting Symptoms Charts

General Information

Use the charts on the following pages of this section to aid in diagnosing specific symptoms. Read each row of blocks from top to bottom. Follow through the chart to identify the corrective action.

WARNING

Troubleshooting presents the risk of equipment damage, personal injury or death. Troubleshooting must be performed by trained, experienced technicians.

Downloaded from www.Manualslib.com manuals search engine

Air Compressor Air Pressure Rises Slowly

Cause	Correction
STEP 1 Air intake system restriction to air compressor is excessive	Replace the air compressor air cleaner (if installed). Check the air intake piping. Check engine air intake restriction if the air compressor inlet is plumbed to the vehicle or equipment intake system. Refer to Procedures 010-059 and 010-028.
OK Go To Next Step	
STEP 2 Air system leaks	Block the vehicle wheels and check the air system for leaks with spring brakes applied and released. Check for leaks from the air compressor gaskets and the air system hoses, fittings, tanks, and valves. Refer to the OEM service manual.
OK Go To Next Step	
STEP 3 Air governor is malfunctioning or **not** set correctly	Check the air governor for correct operation. Make sure the air governor is located less than 0.6 m [2 ft] from the air compressor. Refer to the OEM service manual.
OK Go To Next Step	
STEP 4 Carbon buildup is excessive in the air discharge line, check valve, or cylinder head	Check for carbon buildup. Replace the air compressor discharge line, if necessary. Refer to Procedures 012-014 and .
OK Go To Next Step	
STEP 5 Air system component is malfunctioning	Check the operation of check valves, alcohol evaporators, air dryers, and other OEM-installed air system components. Refer to the manufacturer's instructions.
OK Go To Next Step	
STEP 6 Unloader valve is malfunctioning	Check the unloader valve and unloader body seal. Refer to the OEM service manual.
OK Go To Next Step	
STEP 7 Contact a Cummins® Authorized Repair Facility	

Downloaded from www.Manualslib.com manuals search engine

Air Compressor Cycles Frequently

Cause	Correction
STEP 1 Air system leaks	Block the vehicle wheels and check the air system for leaks with spring brakes applied and released. Check for leaks from the air compressor gaskets and the air system hoses, fittings, tanks, and valves. Refer to the OEM service manual.
OK Go To Next Step	
STEP 2 Air governor is malfunctioning or **not** set correctly	Check the air governor for correct operation. Make sure the air governor is located less than 0.6 m [2 ft] from the air compressor. Refer to the OEM service manual.
OK Go To Next Step	
STEP 3 Air system component is malfunctioning	Check the operation of check valves, alcohol evaporators, air dryers, and other OEM-installed air system components. Refer to the manufacturer's instructions.
OK Go To Next Step	
STEP 4 E-type system is **not** plumbed correctly	Install an Econ valve, a check valve, and system hoses. Refer to the OEM service manual.
OK Go To Next Step	
STEP 5 Carbon buildup is excessive in the air discharge line, check valve, or cylinder head	Check for carbon buildup. Replace the air compressor discharge line, if necessary. Refer to Procedures 012-014 and 010-033.
OK Go To Next Step	
STEP 6 Air compressor pumping time is excessive	Replace the desiccant cartridge on the Turbo/CR 2000 air dryer. Refer to the OEM service manual. Check the air compressor duty cycle. Install a larger air compressor, if necessary. Refer to the OEM service manual.
OK Go To Next Step	
STEP 7 Air dryer outlet check valve is sticking	Lubricate or replace the air dryer outlet check valve assembly. Refer to the manufacturer's instructions.
OK Go To Next Step	
STEP 8 Contact a Cummins® Authorized Repair Facility	

Downloaded from www.Manualslib.com manuals search engine

Air Compressor Noise is Excessive

Cause	Correction
STEP 1 Carbon buildup is excessive in the air discharge line, check valve, or cylinder head	Check for carbon buildup. Replace the air compressor discharge line, if necessary. Refer to Procedures 012-014 and 010-033.
OK — Go To Next Step	
STEP 2 Ice buildup in the air system components	For all models, check for ice in low spots of the air discharge line, dryer inlet, and elbow fittings. On Holset® models, also check the Econ valve (if equipped). Refer to the OEM instructions.
OK — Go To Next Step	
STEP 3 Air compressor mounting hardware is loose, worn, or broken	Check air compressor mounting hardware. Refer to Procedure 012-014.
OK — Go To Next Step	
STEP 4 Air compressor is sending air pulses into the air tanks	Install a ping tank between the air dryer and the wet tank. Refer to the OEM instructions.
OK — Go To Next Step	
STEP 5 Contact a Cummins® Authorized Repair Facility	

Downloaded from www.Manualslib.com manuals search engine

Air Compressor Pumping Excess Lubricating Oil into the Air System

Cause	Correction
STEP 1 Lubricating oil drain interval is excessive	Verify the correct lubricating oil drain interval. Refer to Procedure 102-002.
OK Go To Next Step	
STEP 2 Air intake system restriction to air compressor is excessive	Replace the air compressor air cleaner (if installed). Check the air intake piping. Check engine air intake restriction if the air compressor inlet is plumbed to the vehicle or equipment intake system. Refer to Procedure 010-058.
OK Go To Next Step	
STEP 3 Contaminants are building up in the system reservoirs	Drain the reservoirs daily. Refer to Procedure 102-002.
OK Go To Next Step	
STEP 4 E-type system is **not** plumbed correctly	Install an Econ valve, a check valve, and system hoses. Refer to the OEM service manual.
OK Go To Next Step	
STEP 5 Air compressor pumping time is excessive	Replace the desiccant cartridge on the Turbo/CR 2000 air dryer. Refer to the OEM service manual. Check the air compressor duty cycle. Install a larger air compressor, if necessary. Refer to the OEM service manual.
OK Go To Next Step	
STEP 6 Carbon buildup is excessive in the air discharge line, check valve, or cylinder head	Check for carbon buildup. Replace the air compressor discharge line, if necessary. Refer to Procedure 012-014 and 010-033.
OK Go To Next Step	
STEP 7 Lubricating oil pressure is above specification	Check the oil pressure. Refer to the Lubricating Oil Pressure High symptom tree.
OK Go To Next Step	
STEP 8 Air compressor runs hot	If coolant temperature is above normal, refer to the Coolant Temperature Above Normal - Gradual Overheat symptom tree.
OK Go To Next Step	
STEP 9 Air compressor pumping too high air pressure	Check the air governor for correct operation. Refer to the OEM service manual.
OK Go To Next Step	

Downloaded from www.Manualslib.com manuals search engine

Air Compressor Pumping Excess Lubricating Oil into the Air System

Cause	Correction
STEP 10 Contact a Cummins® Authorized Repair Facility	

Downloaded from www.Manualslib.com manuals search engine

Air Compressor Will Not Maintain Adequate Air Pressure (Not Pumping Continuously)

Cause	Correction
STEP 1 Air system leaks	Block the vehicle wheels and check the air system for leaks with spring brakes applied and released. Check for leaks from the air compressor gaskets and the air system hoses, fittings, tanks, and valves. Refer to the OEM service manual.

OK
Go To Next Step

Cause	Correction
STEP 2 Air governor is malfunctioning or **not** set correctly	Check the air governor for correct operation. Refer to the OEM service manual.

OK
Go To Next Step

STEP 3
Contact a Cummins® Authorized Repair Facility

Downloaded from www.Manualslib.com manuals search engine

Air Compressor Will Not Stop Pumping

Cause	Correction
STEP 1 Air system leaks	Block the vehicle wheels and check the air system for leaks with spring brakes applied and released. Check for leaks from the air compressor gaskets and the air system hoses, fittings, tanks, and valves. Refer to the OEM service manual.
OK Go To Next Step	
STEP 2 Air governor is malfunctioning or **not** set correctly	Check the air governor for correct operation. Make sure the air governor is located less than 0.6 m [2 ft] from the air compressor. Refer to the OEM service manual.
OK Go To Next Step	
STEP 3 Unloader valve is malfunctioning	Check the unloader valve and unloader body seal. Refer to the OEM service manual.
OK Go To Next Step	
STEP 4 Air governor signal line or actuator line is plugged	Inspect the signal line and actuator line. Refer to the manufacturer's instructions.
OK Go To Next Step	
STEP 5 Air system component is malfunctioning	Check the operation of check valves, alcohol evaporators, air dryers, and other OEM-installed air system components. Refer to the manufacturer's instructions.
OK Go To Next Step	
STEP 6 Contact a Cummins® Authorized Repair Facility	

Downloaded from www.Manualslib.com manuals search engine

Alternator Not Charging or Insufficient Charging

Cause	Correction
STEP 1 Vehicle gauge is malfunctioning	Check the vehicle gauge. Refer to the OEM service manual.
OK Go To Next Step	
STEP 2 Alternator belt is loose	Check the alternator belt tension. Refer to Procedure 013-005.
OK Go To Next Step	
STEP 3 Electrical system is "open" (blown fuses, broken wires, or loose connections)	Check the fuses, wires, and connections. Refer to the OEM service manual and the manufacturer's wiring diagrams.
OK Go To Next Step	
STEP 4 Battery cables or connections are loose, broken, or corroded (excessive resistance)	Check the battery cables and connections.
OK Go To Next Step	
STEP 5 Batteries have malfunctioned	Check the condition of the batteries. Replace the batteries, if necessary. Refer to the OEM service manual.
OK Go To Next Step	
STEP 6 Alternator or voltage regulator is malfunctioning	Test the alternator output. Replace the alternator or voltage regulator if necessary. Refer to the OEM service manual.
OK Go To Next Step	
STEP 7 Alternator is overloaded, or alternator capacity is below specification	Install an alternator with a higher capacity. Refer to the OEM service manual.
OK Go To Next Step	
STEP 8 Contact a Cummins® Authorized Repair Facility	

Downloaded from www.Manualslib.com manuals search engine

Alternator Overcharging

Cause	Correction
STEP 1 Battery cell is damaged (open circuit)	Check the condition of the batteries. Replace the batteries, if necessary. Refer to the OEM service manual.
OK Go To Next Step	
STEP 2 Voltage regulator is malfunctioning	Check the voltage regulator. Replace the voltage regulator, if necessary. Refer to the OEM service manual.
OK Go To Next Step	
STEP 3 Contact a Cummins® Authorized Repair Facility	

Downloaded from www.Manualslib.com manuals search engine

Coolant Loss - External

Cause		Correction
STEP 1 Coolant level is above specification	....	Check the coolant level. Refer to the OEM service manual.
OK Go To Next Step		
STEP 2 External coolant leak	....	Inspect the engine for coolant leaking from hoses, draincocks, water manifold, expansion and pipe plugs, fittings, radiator core, exhaust heat shield, heat exchanger, air compressor and cylinder head gaskets, lubricating oil cooler, water pump seal, and OEM-mounted components that have coolant flow.
OK Go To Next Step		
STEP 3 Radiator cap is **not** correct, is malfunctioning, or has low-pressure rating	....	Check the radiator pressure cap. Refer to the OEM service manual.
OK Go To Next Step		
STEP 4 Cooling system hose is collapsed, restricted, or leaking	....	Inspect the hoses. Refer to Procedure 008-018.
OK Go To Next Step		
STEP 5 Coolant fill line is restricted or obstructed	....	Check the coolant fill line for restrictions or obstructions. Refer to the OEM service manual.
OK Go To Next Step		
STEP 6 Engine is overheating	....	Refer to the Coolant Temperature Above Normal - Gradual Overheat and the Coolant Temperature Above Normal - Sudden Overheat symptom trees.
OK Go To Next Step		
STEP 7 Contact a Cummins® Authorized Repair Facility		

Downloaded from www.Manualslib.com manuals search engine

Coolant Temperature Above Normal - Gradual Overheat

Cause	Correction
STEP 1 Cold weather radiator cover or winterfront is closed	Open the cold weather radiator cover or the winterfront. Maintain a minimum of 384 cm^2 [60 in^2] or approximately 19.6 x 19.6 cm [7.5 x 7.5 in] of opening at all times. Refer to .
OK Go To Next Step	
STEP 2 Charge air cooler fins, radiator fins, or air conditioner condenser fins are damaged or obstructed with debris	Inspect the charge air cooler, air conditioner condenser, and radiator fins. Clean, if necessary. Refer to the OEM service manual.
OK Go To Next Step	
STEP 3 Coolant level is below specification	Inspect the engine and cooling system for external coolant leaks. Repair if necessary. Add coolant. Refer to Coolant Recommendations and Specification, Procedure 018-004.
OK Go To Next Step	
STEP 4 Coolant mixture of antifreeze and water is **not** correct	Verify the concentration of antifreeze in the coolant. Add antifreeze or water to correct the concentration. Refer to Coolant Recommendations and Specification, Procedure 018-004.
OK Go To Next Step	
STEP 5 Fan shroud is damaged or missing or the air recirculation baffles are damaged or missing	Inspect the shroud and the recirculation baffles. Repair, replace, or install, if necessary. Refer to the OEM service manual.
OK Go To Next Step	
STEP 6 Fan drive belt is broken or loose	Check the fan drive belt. Replace the belt if necessary. Refer to Procedure 008-002.
OK Go To Next Step	
STEP 7 Coolant temperature gauge is malfunctioning	Test the temperature gauge. Repair or replace the gauge, if necessary.
OK Go To Next Step	
STEP 8 Radiator cap is **not** correct, is malfunctioning, or has low-pressure rating	Check the radiator pressure cap. Refer to the OEM service manual.
OK Go To Next Step	

Downloaded from www.Manualslib.com manuals search engine

Coolant Temperature Above Normal - Gradual Overheat

Cause	Correction
STEP 9 Cooling system hose is collapsed, restricted, or leaking	Inspect the hoses. Refer to Procedure 008-018.
OK Go To Next Step	
STEP 10 Fill line or vent lines are restricted, obstructed, or **not** routed correctly	Check the vent lines and the fill line for correct routing and for restriction. Refer to the OEM service manual.
OK Go To Next Step	
STEP 11 Intake manifold air temperature is above specification	Refer to the Intake Manifold Air Temperature Above Specification symptom tree.
OK Go To Next Step	
STEP 12 Lubricating oil level is above or below specification	Check the oil level. Add or drain oil, if necessary. Refer to Procedure 007-043.
OK Go To Next Step	
STEP 13 Thermostat is **not** correct or is malfunctioning	Check the thermostat for the correct part number and for correct operation. Contact a Cummins Authorized Repair Facility.
OK Go To Next Step	
STEP 14 Lubricating oil is contaminated with coolant or fuel	Contact a Cummins Authorized Repair Facility.
OK Go To Next Step	
STEP 15 Water pump is malfunctioning	Check the water pump for correct operation. Replace the water pump if necessary.
OK Go To Next Step	
STEP 16 Radiator core is internally obstructed or damaged, or the check valve or J-tube is malfunctioning	Inspect the radiator and clean if necessary. Refer to the OEM service manual.
OK Go To Next Step	
STEP 17 Torque converter is malfunctioning	Check the torque converter. Refer to the OEM service manual.
OK Go To Next Step	

Downloaded from www.Manualslib.com manuals search engine

Coolant Temperature Above Normal - Gradual Overheat

Cause	Correction
STEP 18 Torque converter cooler or hydraulic oil cooler is malfunctioning	Remove and inspect the cooler cores and o-rings. Refer to the OEM service manual.
OK Go To Next Step	
STEP 19 Vehicle cooling system is **not** adequate	Verify that the engine and vehicle cooling systems are using the correct components. Refer to the OEM service manual.
OK Go To Next Step	
STEP 20 Engine is overfueled	Check the engine fuel rate. Refer to the Fuel Consumption Excessive symptom tree.
OK Go To Next Step	
STEP 21 Contact a Cummins® Authorized Repair Facility	

Downloaded from www.Manualslib.com manuals search engine

Coolant Temperature Above Normal - Sudden Overheat

Cause	Correction
STEP 1 Coolant level is below specification	Inspect the engine and cooling system for external coolant leaks. Repair if necessary. Add coolant. Refer to Procedure 008-018.
OK Go To Next Step	
STEP 2 Fan drive or fan controls are malfunctioning	Check the fan drive and controls. Refer to the OEM service manual.
OK Go To Next Step	
STEP 3 Fan drive belt is broken or loose	Check the fan drive belt. Replace the belt if necessary. Refer to Procedure 008-002.
OK Go To Next Step	
STEP 4 Cold weather radiator cover or winterfront is closed	Open the cold weather radiator cover or the winterfront. Maintain a minimum of 384 cm^2 [60 in^2] or approximately 19.6 x 19.6 cm [7.5 x 7.5 in] of opening at all times. Refer to Procedure 101-004.
OK Go To Next Step	
STEP 5 Radiator cap is **not** correct, is malfunctioning, or has low-pressure rating	Check the radiator pressure cap. Refer to the OEM service manual.
OK Go To Next Step	
STEP 6 Charge air cooler fins, radiator fins, or air conditioner condenser fins are damaged or obstructed with debris	Inspect the charge air cooler, air conditioner condenser, and radiator fins. Clean, if necessary. Refer to Procedure 010-027.
OK Go To Next Step	
STEP 7 Coolant temperature gauge is malfunctioning	Test the temperature gauge. Repair or replace the gauge, if necessary.
OK Go To Next Step	
STEP 8 Cooling system hose is collapsed, restricted, or leaking	Inspect the hoses. Refer to Procedure 008-018.
OK Go To Next Step	
STEP 9 Fill line or vent lines are restricted, obstructed, or **not** routed correctly	Check the vent lines and the fill line for correct routing and for restriction. Refer to the OEM service manual.
OK Go To Next Step	

Downloaded from www.Manualslib.com manuals search engine

Coolant Temperature Above Normal - Sudden Overheat

Cause		Correction
STEP 10 Thermostat is **not** correct or is malfunctioning	....	Check the thermostat for the correct part number and for correct operation. Contact a Cummins Authorized Repair Facility.

OK

Go To Next Step

STEP 11

Contact a Cummins® Authorized Repair Facility

Downloaded from www.Manualslib.com manuals search engine

Coolant Temperature Below Normal

Cause	Correction
STEP 1 Coolant temperature gauge or sensor is malfunctioning	Test the gauge and the sensor. Repair or replace, if necessary. Refer to the OEM service manual.
OK Go To Next Step	
STEP 2 Excessive coolant flow through OEM plumbing and heater cores	Close valves to heater cores. Run engine. If engine operates at normal temperature, refer to the OEM service manual.
OK Go To Next Step	
STEP 3 Engine is operating at low ambient temperature	Check the winterfront, shutters, and under-the-hood air. Use under-the-hood intake air in cold weather. Refer to the OEM service manual.
OK Go To Next Step	
STEP 4 Fan drive or fan controls are malfunctioning	Check the fan drive and controls. Refer to the OEM service manual.
OK Go To Next Step	
STEP 5 Thermostat is **not** correct or is malfunctioning	Check the thermostat for the correct part number and for correct operation. Contact a Cummins Authorized Repair Facility.
OK Go To Next Step	
STEP 6 Contact a Cummins® Authorized Repair Facility	

Downloaded from www.Manualslib.com manuals search engine

Cranking Fuel Pressure is Low

Cause	Correction
STEP 1 Fuel connections on the low-pressure side of the pump are loose	Tighten all fuel fittings and connections between the fuel tanks and the fuel pump.
OK Go To Next Step	
STEP 2 Fuel level is low in the tank	Fill the supply tank. Refer to the OEM service manual.
OK Go To Next Step	
STEP 3 Fuel suction standpipe in the fuel tank is broken	Check and repair the standpipe, if necessary. Refer to the OEM service manual.
OK Go To Next Step	
STEP 4 Contact a Cummins® Authorized Repair Facility	

Downloaded from www.Manualslib.com manuals search engine

Engine Acceleration or Response Poor

Cause	Correction
STEP 1 Operator technique is **not** correct	Refer to Operating Instructions, Section 1.
OK — Go To Next Step	
STEP 2 Fuel level is low in the tank	Fill the supply tank. Refer to the OEM service manual.
OK — Go To Next Step	
STEP 3 Vehicle parasitics are excessive	Check the vehicle brakes for dragging, transmission malfunction, cooling fan operation cycle time, and engine-driven units. Refer to the OEM service manual.
OK — Go To Next Step	
STEP 4 Clutch is malfunctioning or is **not** correct	Compare the drivetrain specifications to Cummins recommendations. Check the clutch for correct operation. Refer to the OEM service manual.
OK — Go To Next Step	
STEP 5 Drivetrain is **not** correctly matched to the engine	Check for correct gearing and drivetrain components. Refer to the OEM service manual.
OK — Go To Next Step	
STEP 6 Electronic fault codes are active	For instructions on how to read active fault codes, refer to Diagnostic Fault Codes in Section 1. If fault codes are active, contact a Cummins Authorized Repair Facility.
OK — Go To Next Step	
STEP 7 Fuel leak	Check the fuel lines, fuel connections, and fuel filters for leaks. Check the fuel lines to the supply tanks. Refer to the OEM service manual.
OK — Go To Next Step	
STEP 8 Intake manifold air temperature is above specification	Refer to Intake Manifold Air Temperature Above Specification symptom tree.
OK — Go To Next Step	
STEP 9 Fuel supply line restriction between the fuel pump and the injectors	Check the fuel supply line from the fuel pump to the cylinder head for sharp bends that can cause restrictions. Refer to the OEM service manual.
OK — Go To Next Step	

Downloaded from www.Manualslib.com manuals search engine

Engine Acceleration or Response Poor

Cause	Correction
STEP 10 Charge air cooler is restricted or leaking	Inspect the charge air cooler for air restrictions or leaks. Refer to Procedure 010-027.
OK Go To Next Step	
STEP 11 Air intake or exhaust leaks	Check for loose or damaged piping connections and missing pipe plugs. Check the turbocharger and exhaust manifold mounting. Refer to Procedures 010-033.
OK Go To Next Step	
STEP 12 Air intake system restriction is above specification	Check the air intake system for restriction. Clean or replace the air filter and inlet piping as necessary. Refer to the Intake Manifold Air Temperature Above Specification symptom tree.
OK Go To Next Step	
STEP 13 Fuel grade is **not** correct for the application or the fuel quality is poor	Operate the engine from a tank of high-quality fuel. Refer to Fuel Recommendations and Specifications, Procedure 018-002.
OK Go To Next Step	
STEP 14 Contact a Cummins® Authorized Repair Facility	

Downloaded from www.Manualslib.com manuals search engine

Engine Difficult to Start or Will Not Start (Exhaust Smoke)

Cause	Correction
STEP 1 Fuel level is low in the tank	Fill the supply tank. Refer to the OEM service manual.
OK Go To Next Step	
STEP 2 Electronic fault codes are active	For instructions on how to read active fault codes, refer to Diagnostic Fault Codes in Procedure 101-007. If fault codes are active, contact a Cummins Authorized Repair Facility.
OK Go To Next Step	
STEP 3 Starting aid is necessary for cold weather or starting aid is malfunctioning	Check for the correct operation of the starting aid. Refer to the manufacturer's instructions. Refer to Diagnostic Fault Codes in Procedure 101-007 Section 1.
OK Go To Next Step	
STEP 4 Engine block heater is malfunctioning (if equipped)	Check the electrical sources and wiring to the cylinder block heater. Replace the block heater, if necessary. Refer to the OEM service manual.
OK Go To Next Step	
STEP 5 Fuel heater is malfunctioning (if equipped)	Check the fuel heater and replace, if necessary. Refer to the OEM service manual.
OK Go To Next Step	
STEP 6 Battery voltage is low	Check the batteries and the unswitched battery supply circuit. Refer to Procedure 013-007 and the OEM service manual.
OK Go To Next Step	
STEP 7 Engine cranking speed is too slow	If the cranking speed is slower than 150 rpm, refer to the OEM service manual.
OK Go To Next Step	
STEP 8 Vehicle parasitics are excessive	Check the vehicle brakes for dragging, transmission malfunction, cooling fan operation cycle time, and engine-driven units. Refer to the OEM service manual.
OK Go To Next Step	
STEP 9 Fuel leak	Check the fuel lines, fuel connections, and fuel filters for leaks. Check the fuel lines to the supply tanks. Refer to the OEM service manual.
OK Go To Next Step	

Downloaded from www.Manualslib.com manuals search engine

Engine Difficult to Start or Will Not Start (Exhaust Smoke)

Cause	Correction
STEP 10 Air in the fuel system	Check for air in the fuel system. Tighten or replace the fuel connections, fuel lines, fuel tank standpipe, and fuel filters as necessary.
OK Go To Next Step	
STEP 11 Air intake system restriction is above specification	Check the air intake system for restriction. Clean or replace the air filter and inlet piping as necessary. Refer to Intake Manifold Air Temperature Above Specification symptom tree.
OK Go To Next Step	
STEP 12 Fuel grade is **not** correct for the application or the fuel quality is poor	Operate the engine from a tank of high-quality fuel. Refer to Fuel Recommendations and Specifications, Procedure 018-002.
OK Go To Next Step	
STEP 13 Contact a Cummins® Authorized Repair Facility	

Downloaded from www.Manualslib.com manuals search engine

Engine Difficult to Start or Will Not Start (No Exhaust Smoke)

Cause	Correction
STEP 1 Fuel level is low in the tank	Fill the supply tank. Refer to the OEM service manual.
OK Go To Next Step	
STEP 2 Electronic fault codes are active	For instructions on how to read active fault codes, refer to Diagnostic Fault Codes, Procedure 101-007. If fault codes are active, contact a Cummins Authorized Repair Facility.
OK Go To Next Step	
STEP 3 OEM engine protection system is malfunctioning	Isolate the OEM engine protection system. Follow the OEM service manuals to check for a malfunction.
OK Go To Next Step	
STEP 4 Battery voltage is low	Check the batteries and the unswitched battery supply circuit. Refer to Procedure 013-007 and the OEM service manual.
OK Go To Next Step	
STEP 5 Battery voltage supply to the electronic control module (ECM) is low, interrupted, or open	Check the battery connections, the fuses, and the unswitched battery supply circuit. Refer to Procedure 013-009 and the OEM service manual.
OK Go To Next Step	
STEP 6 Air in the fuel system	Check for air in the fuel system. Tighten or replace the fuel connections, fuel lines, fuel tank standpipe, and fuel filters as necessary.
OK Go To Next Step	
STEP 7 Contact a Cummins® Authorized Repair Facility	

Downloaded from www.Manualslib.com manuals search engine

Engine Noise Excessive

Cause	Correction
STEP 1 Fan drive belt is loose	Check the belt tension and tighten if necessary.
OK — Go To Next Step	
STEP 2 Fan is loose, damaged, or **not** balanced	Check the fan. Refer to Procedure 008-040.
OK — Go To Next Step	
STEP 3 Fan clutch, hydraulic pump, or refrigerant compressor noise is excessive	Isolate each component and check for noise. Refer to the OEM service manual.
OK — Go To Next Step	
STEP 4 Air intake or exhaust leaks	Check for loose or damaged piping connections and missing pipe plugs. Check the turbocharger and exhaust manifold mounting. Refer to Procedure 010-033.
OK — Go To Next Step	
STEP 5 Air intake or exhaust piping is contacting the chassis or cab	Inspect the air piping, chassis, and cab for contact points. Refer to the OEM service manual.
OK — Go To Next Step	
STEP 6 Lubricating oil level is above or below specification	Check the oil level. Add or drain oil, if necessary. Refer to Procedure 007-043.
OK — Go To Next Step	
STEP 7 Lubricating oil is thin or diluted	Refer to Lubricating Oil Contaminated symptom tree.
OK — Go To Next Step	
STEP 8 Lubricating oil pressure is below specification	Check the oil pressure. If the pressure is low, refer toLubricating Oil Contaminated symptom tree.
OK — Go To Next Step	
STEP 9 Vibration damper is damaged	Inspect the vibration damper. Refer to Procedure 001-051 or 001-052.
OK — Go To Next Step	
STEP 10 Coolant temperature is above specification	Refer to the Coolant Temperature Above Normal - Gradual Overheat symptom tree.
OK — Go To Next Step	

Downloaded from www.Manualslib.com manuals search engine

Engine Noise Excessive

Cause		Correction
STEP 11 Drivetrain noise is excessive	....	Disconnect the drivetrain. Check for engine noise. Refer to the OEM service manual.
OK Go To Next Step		
STEP 12 Engine mounts are worn, damaged, or **not** correct	....	Check the engine mounts. Refer to the OEM service manual.
OK Go To Next Step		
STEP 13 Overhead adjustments are **not** correct	....	Measure and adjust the overhead settings. Refer to Procedure 003-004.
OK Go To Next Step		
STEP 14 Air compressor noise is excessive	....	Refer to the Air Compressor Noise Excessive symptom tree.
OK Go To Next Step		
STEP 15 Combustion noise excessive	....	Refer to the Engine Noise Excessive - Combustion Knocks symptom tree.
OK Go To Next Step		
STEP 16 Contact a Cummins® Authorized Repair Facility		

Downloaded from www.Manualslib.com manuals search engine

Engine Noise Excessive — Combustion Knocks

Cause	Correction
STEP 1 Fuel grade is **not** correct for the application or the fuel quality is poor	Operate the engine from a tank of high-quality fuel. Refer to Fuel for Cummins Engines, Bulletin 3379001.
OK Go To Next Step	
STEP 2 Air in the fuel system	Check for air in the fuel system. Tighten or replace the fuel connections, fuel lines, fuel tank standpipe, and fuel filters as necessary.
OK Go To Next Step	
STEP 3 Coolant temperature is above specification	Refer to Coolant Temperature Above Normal - Gradual Overheat and Coolant Temperature Above Normal - Sudden Overheat symptom trees.
OK Go To Next Step	
STEP 4 Overhead adjustments are **not** correct	Measure and adjust the overhead settings. Refer to Procedure 003-004.
OK Go To Next Step	
STEP 5 Contact a Cummins® Authorized Repair Facility	

Downloaded from www.Manualslib.com manuals search engine

Engine Power Output Low

Cause	Correction
STEP 1 Electronic fault codes are active	For instructions on how to read active fault codes, refer to Diagnostic Fault Codes, Procedure 101-007. If fault codes are active, contact a Cummins Authorized Repair Facility.
OK Go To Next Step	
STEP 2 Fuel level is low in the tank	Fill the supply tank. Refer to the OEM service manual.
OK Go To Next Step	
STEP 3 Engine is operating above recommended altitude	Engine power decreases above recommended altitude. Refer to the Engine Data Sheet for specifications.
OK Go To Next Step	
STEP 4 Tachometer is **not** calibrated or is malfunctioning	Compare the tachometer reading with a handheld tachometer or an electronic service tool reading. Calibrate or replace the tachometer as necessary. Refer to the OEM service manual.
OK Go To Next Step	
STEP 5 Air intake system restriction is above specification	Check the air intake system for restriction. Clean or replace the air filter and inlet piping as necessary. Refer to Procedure 010-033.
OK Go To Next Step	
STEP 6 Air intake or exhaust leaks	Check for loose or damaged piping connections and missing pipe plugs. Check the turbocharger and exhaust manifold mounting. Refer to Procedure 010-033.
OK Go To Next Step	
STEP 7 Fuel leak	Check the fuel lines, fuel connections, and fuel filters for leaks. Check the fuel lines to the supply tanks. Refer to the OEM service manual.
OK Go To Next Step	
STEP 8 Air in the fuel system	Check for air in the fuel system. Tighten or replace the fuel connections, fuel lines, fuel tank standpipe, and fuel filters as necessary.
OK Go To Next Step	

Downloaded from www.Manualslib.com manuals search engine

Engine Power Output Low

Cause	Correction
STEP 9 Vehicle parasitics are excessive	Check the vehicle brakes for dragging, transmission malfunction, cooling fan operation cycle time, and engine-driven units. Refer to the OEM service manual.
OK Go To Next Step	
STEP 10 Charge air cooler is restricted or leaking	Inspect the charge air cooler for air restrictions or leaks. Refer to Procedure 010-027.
OK Go To Next Step	
STEP 11 Lubricating oil level is above specification	Check the oil level. Verify the dipstick calibration and oil pan capacity. Fill the system to the specified level. Refer to the Lubricating Oil Level is Above Specification symptom tree.
OK Go To Next Step	
STEP 12 Contact a Cummins® Authorized Repair Facility	

Downloaded from www.Manualslib.com manuals search engine

Engine Runs Rough at Idle

Cause	Correction
STEP 1 Engine is cold	Allow the engine to warm to operating temperature. If the engine will **not** reach operating temperature, refer to the Coolant Temperature Below Normal symptom tree.
OK Go To Next Step	
STEP 2 Electronic fault codes are active	For instructions on how to read active fault codes, refer to Diagnostic Fault Codes Procedure 101-007. If fault codes are active, contact a Cummins Authorized Repair Facility.
OK Go To Next Step	
STEP 3 Air in the fuel system	Check for air in the fuel system. Tighten or replace the fuel connections, fuel lines, fuel tank standpipe, and fuel filters as necessary.
OK Go To Next Step	
STEP 4 Fuel supply line or passage restriction between the fuel pump and the injectors	Check the fuel supply line or passage for sharp bends or restriction. Diagnostic Fault Codes Procedure 101-007
OK Go To Next Step	
STEP 5 Engine mounts are worn, damaged, or **not** correct	Check the engine mounts. Refer to Procedure 000-008.
OK Go To Next Step	
STEP 6 Moisture in the wiring harness connectors	Dry the connectors with Cummins electronic cleaner, Part Number 3824510.
OK Go To Next Step	
STEP 7 Fuel grade is **not** correct for the application or the fuel quality is poor	Operate the engine from a tank of high-quality fuel. Refer to Fuel Recommendations and Specifications Procedure 018-002.
OK Go To Next Step	
STEP 8 Contact a Cummins® Authorized Repair Facility	

Downloaded from www.Manualslib.com manuals search engine

Engine Runs Rough or Misfires

Cause	Correction
STEP 1 Engine is cold	Allow the engine to warm to operating temperature. If the engine will **not** reach operating temperature, refer to the Coolant Temperature Below Normal symptom tree.

OK
Go To Next Step

Cause	Correction
STEP 2 Electronic fault codes are active	For instructions on how to read active fault codes, refer to Diagnostic Fault Codes Procedure 101-007. If fault codes are active, contact a Cummins Authorized Repair Facility.

OK
Go To Next Step

Cause	Correction
STEP 3 Air in the fuel system	Check for air in the fuel system. Tighten or replace the fuel connections, fuel lines, fuel tank standpipe, and fuel filters as necessary.

OK
Go To Next Step

Cause	Correction
STEP 4 Fuel supply line or passage restriction between the fuel pump and the injectors	Check the fuel supply line or passage for sharp bends or restriction. Diagnostic Fault Codes Procedure 101-007

OK
Go To Next Step

Cause	Correction
STEP 5 Engine mounts are worn, damaged, or **not** correct	Check the engine mounts. Refer to Procedure 000-008.

OK
Go To Next Step

Cause	Correction
STEP 6 Moisture in the wiring harness connectors	Dry the connectors with Cummins electronic cleaner, Part Number 3824510.

OK
Go To Next Step

Cause
STEP 7 Contact a Cummins® Authorized Repair Facility

Downloaded from www.Manualslib.com manuals search engine

Engine Shuts Off Unexpectedly or Dies During Deceleration

Cause	Correction
STEP 1 Fuel level is low in the tank	Fill the supply tank. Refer to the OEM service manual.
OK Go To Next Step	
STEP 2 Electronic fault codes are active	For instructions on how to read active fault codes, refer to Diagnostic Fault Codes Procedure 101-007. If fault codes are active, contact a Cummins Authorized Repair Facility.
OK Go To Next Step	
STEP 3 Idle shutdown or PTO shutdown features are activated	Check the time limit on idle and PTO shutdowns with an electronic service tool. Refer to Electronic Controlled Fuel System Procedure 101-007.
OK Go To Next Step	
STEP 4 Moisture in the wiring harness connectors	Dry the connectors with Cummins electronic cleaner, Part Number 3824510.
OK Go To Next Step	
STEP 5 OEM engine protection system is malfunctioning	Isolate the OEM engine protection system. Follow the OEM service manuals to check for a malfunction.
OK Go To Next Step	
STEP 6 Air in the fuel system	Check for air in the fuel system. Tighten or replace the fuel connections, fuel lines, fuel tank standpipe, and fuel filters as necessary.
OK Go To Next Step	
STEP 7 Contact a Cummins® Authorized Repair Facility	

Downloaded from www.Manualslib.com manuals search engine

Engine Speed Surges at Low or High Idle

Cause	Correction
STEP 1 Fuel level is low in the tank	Fill the supply tank. Refer to the OEM service manual.
OK — Go To Next Step	
STEP 2 Electronic fault codes are active	For instructions on how to read active fault codes, refer to Diagnostic Fault Codes Procedure 101-007. If fault codes are active, contact a Cummins Authorized Repair Facility.
OK — Go To Next Step	
STEP 3 Moisture in the wiring harness connectors	Dry the connectors with Cummins electronic cleaner, Part Number 3824510.
OK — Go To Next Step	
STEP 4 Air in the fuel system	Check for air in the fuel system. Tighten or replace the fuel connections, fuel lines, fuel tank standpipe, and fuel filters as necessary.
OK — Go To Next Step	
STEP 5 Fuel grade is **not** correct for the application or the fuel quality is poor	Operate the engine from a tank of high-quality fuel. Refer to Fuel Recommendations and Specifications Procedure 018-002.
OK — Go To Next Step	
STEP 6 Contact a Cummins® Authorized Repair Facility	

Downloaded from www.Manualslib.com manuals search engine

Engine Speed Surges Under Load or in Operating Range

Cause	Correction
STEP 1 Fuel level is low in the tank	Fill the supply tank. Refer to the OEM service manual.
OK Go To Next Step	
STEP 2 Electronic fault codes are active	For instructions on how to read active fault codes, refer to Diagnostic Fault Codes Procedure 101-007. If fault codes are active, contact a Cummins Authorized Repair Facility.
OK Go To Next Step	
STEP 3 Moisture in the wiring harness connectors	Dry the connectors with Cummins electronic cleaner, Part Number 3824510.
OK Go To Next Step	
STEP 4 Air in the fuel system	Check for air in the fuel system. Tighten or replace the fuel connections, fuel lines, fuel tank standpipe, and fuel filters as necessary.
OK Go To Next Step	
STEP 5 Idling with excessive load	Use the PTO feature for loaded conditions at low engine speeds. Refer to Engine speed Surges in PTO or Cruise Control symptom tree.
OK Go To Next Step	
STEP 6 Vehicle parasitics are excessive	Check the vehicle brakes for dragging, transmission malfunction, cooling fan operation cycle time, and engine-driven units. Refer to the OEM service manual.
OK Go To Next Step	
STEP 7 Clutch is malfunctioning or is **not** correct	Compare the drivetrain specifications to Cummins recommendations. Check the clutch for correct operation. Refer to the OEM service manual.
OK Go To Next Step	
STEP 8 Fuel grade is **not** correct for the application or the fuel quality is poor	Operate the engine from a tank of high-quality fuel. Refer to Fuel Recommendations and Specifications Procedure 018-002.
OK Go To Next Step	
STEP 9 Contact a Cummins® Authorized Repair Facility	

Downloaded from www.Manualslib.com manuals search engine

Engine Speed Surges in PTO or Cruise Control

Cause	Correction
STEP 1 Engine speed also surges at idle	Refer to Engine Speed Surges at Low or High Idle symptom tree.
OK Go To Next Step	
STEP 2 Engine speed surges while in the normal operating range and **not** in PTO or cruise control	Refer to Engine Speed Surges Under Load or in Operating Range symptom tree.
OK Go To Next Step	
STEP 3 Electronic fault codes are active	For instructions on how to read active fault codes, refer to Diagnostic Fault Codes Procedure 101-007. If fault codes are active, contact a Cummins Authorized Repair Facility.
OK Go To Next Step	
STEP 4 Moisture in the wiring harness connectors	Dry the connectors with Cummins electronic cleaner, Part Number 3824510.
OK Go To Next Step	
STEP 5 Contact a Cummins® Authorized Repair Facility	

Downloaded from www.Manualslib.com manuals search engine

Engine Starts But Will Not Keep Running

Cause	Correction
STEP 1 Fuel level is low in the tank	Fill the supply tank. Refer to the OEM service manual.
OK Go To Next Step	
STEP 2 Battery voltage supply to the electronic control module (ECM) is low, interrupted, or open	Check the battery connections, the fuses, and the unswitched battery supply circuit. Refer to Procedure 013-009 and the OEM service manual.
OK Go To Next Step	
STEP 3 Electronic fault codes are active	For instructions on how to read active fault codes, refer to Diagnostic Fault Codes Procedure 101-007. If fault codes are active, contact a Cummins Authorized Repair Facility.
OK Go To Next Step	
STEP 4 Contact a Cummins® Authorized Repair Facility	

Downloaded from www.Manualslib.com manuals search engine

Engine Vibration Excessive

Cause	Correction
STEP 1 Belt-driven accessories are malfunctioning	Check the fan hub, alternator, refrigerant compressor, and hydraulic pump for interference. Isolate belt-driven accessories and check for vibration. Refer to Procedure 008-036, 013-001, and the OEM service manual.
OK Go To Next Step	
STEP 2 Engine idle speed is set too low (electronically controlled fuel systems)	Verify the correct idle speed setting. Increase the idle speed with the idle increment switch or an electronic service tool. Refer to a Cummins Authorized Repair Facility.
OK Go To Next Step	
STEP 3 Engine mounts are worn, damaged, or **not** correct	Check the engine mounts. Refer to Procedure 000-008.
OK Go To Next Step	
STEP 4 Fan is loose, damaged, or has excessive hub bearing end play	Check the fan. Refer to Procedure 008-040.
OK Go To Next Step	
STEP 5 Engine is misfiring	Refer to the Engine Runs Rough or Misfires symptom tree.
OK Go To Next Step	
STEP 6 Electronic fault codes are active	For instructions on how to read active fault codes, refer to Diagnostic Fault Codes Procedure 101-007. If fault codes are active, contact a Cummins Authorized Repair Facility.
OK Go To Next Step	
STEP 7 Vibration damper is damaged	Inspect the vibration damper. Refer to Procedure 001-051 or 001-052.
OK Go To Next Step	
STEP 8 Contact a Cummins® Authorized Repair Facility	

Downloaded from www.Manualslib.com manuals search engine

Engine Will Not Crank or Cranks Slowly (Air Starter)

Cause	Correction
STEP 1 Air pressure is low in the air tanks	Increase air pressure with an external air source. Refer to the OEM service manual.
OK Go To Next Step	
STEP 2 Engine-driven units are engaged	Disengage engine-driven units.
OK Go To Next Step	
STEP 3 Lubricating oil level is above specification	Check the oil level. Verify the dipstick calibration and oil pan capacity. Fill the system to the specified level. Refer to Lubricating Oil Level is Above Specification symptom tree.
OK Go To Next Step	
STEP 4 Lubricating oil does **not** meet specifications for operating conditions	Change the oil and filters. Refer to Lubricating Oil Does Not Meet Specification symptom tree or Procedure 018-003.
OK Go To Next Step	
STEP 5 Starting motor is malfunctioning or starting motor is **not** correct	Check the starting motor operation. Compare the starting motor with the engine and vehicle specifications. Refer to the manufacturer's instructions.
OK Go To Next Step	
STEP 6 Contact a Cummins® Authorized Repair Facility	

Downloaded from www.Manualslib.com manuals search engine

Engine Will Not Crank or Cranks Slowly (Electric Starter)

Cause	Correction
STEP 1 Battery voltage is low	Check the batteries and the unswitched battery supply circuit. Refer to Procedure 013-007.
OK Go To Next Step	
STEP 2 Battery cables or connections are loose, broken, or corroded (excessive resistance)	Check the battery cables and connections.
OK Go To Next Step	
STEP 3 Battery capacity is below specification	Refer to Procedure 013-007. Replace the batteries if necessary.
OK Go To Next Step	
STEP 4 Battery cables are **not** the correct gauge or length	Replace the battery cables with larger gauge or shorter length cables. Refer to Procedure 013-009.
OK Go To Next Step	
STEP 5 OEM starter interlock devices engaged	Check the starter interlock devices. Refer to the OEM service manual.
OK Go To Next Step	
STEP 6 Lubricating oil pressure switch, gauge, or sensor is malfunctioning or is **not** in the correct location	Check the oil pressure switch, gauge, or sensor for correct operation and location. Refer to the OEM service manual.
OK Go To Next Step	
STEP 7 Engine-driven units are engaged	Disengage engine-driven units.
OK Go To Next Step	
STEP 8 Lubricating oil level is above specification	Check the oil level. Verify the dipstick calibration and oil pan capacity. Fill the system to the specified level. Refer to the Lubricating Oil Level is Above Specification symptom tree.
OK Go To Next Step	
STEP 9 Lubricating oil does **not** meet specifications for operating conditions	Change the oil and filters. Refer to Procedure Procedure 018-024.
OK Go To Next Step	
STEP 10 Contact a Cummins® Authorized Repair Facility	

Downloaded from www.Manualslib.com manuals search engine

Engine Will Not Reach Rated Speed (RPM)

Cause	Correction
STEP 1 Electronic fault codes are active	For instructions on how to read active fault codes, refer to Diagnostic Fault Codes Procedure 101-007. If fault codes are active, contact a Cummins Authorized Repair Facility.
OK Go To Next Step	
STEP 2 Vehicle parasitics are excessive	Check the vehicle brakes for dragging, transmission malfunction, cooling fan operation cycle time, and engine-driven units. Refer to the OEM service manual.
OK Go To Next Step	
STEP 3 Engine power output is low	Refer to the Engine Power Output Low symptom tree.
OK Go To Next Step	
STEP 4 Contact a Cummins® Authorized Repair Facility	

Downloaded from www.Manualslib.com manuals search engine

Fault Code Warning Lamps Stay On (No Apparent Reason)

Cause	Correction
STEP 1 Diagnostic shorting plug is installed	Remove the diagnostic shorting plug.
OK — Go To Next Step	
STEP 2 Drivetrain components are malfunctioning or are **not** correct	Compare the drivetrain components to the engine and equipment specifications. Isolate the drivetrain components and check for vibrations. Refer to the OEM service manual.
OK — Go To Next Step	
STEP 3 Electronic fault codes are active	For instructions on how to read active fault codes, refer to Diagnostic Fault Codes Procedure 101-007. If fault codes are active, contact a Cummins Authorized Repair Facility.
OK — Go To Next Step	
STEP 4 Contact a Cummins® Authorized Repair Facility	

Downloaded from www.Manualslib.com manuals search engine

Fault Code Warning Lamps Do Not Illuminate

Cause		Correction
STEP 1 Keyswitch is in the OFF position	....	Turn the keyswitch to the ON position.
OK Go To Next Step		
STEP 2 Battery voltage supply to the electronic control module (ECM) is low, interrupted, or open	....	Check the battery connections, the fuses, and the unswitched battery supply circuit. Refer to Procedure 013-009.
OK Go To Next Step		
STEP 3 Idle shutdown or PTO shutdown features are activated	....	Check the time limit on idle and PTO shutdowns with an electronic service tool. Refer to the appropriate electronic service tool.
OK Go To Next Step		
STEP 4 Contact a Cummins® Authorized Repair Facility		

Downloaded from www.Manualslib.com manuals search engine

Fuel Consumption Excessive

Cause	Correction
STEP 1 Operator technique is **not** correct	Explain correct engine operation to the operator. Refer to Operating Instructions, Procedure 101-999.
OK Go To Next Step	
STEP 2 Electronic fault codes are active	For instructions on how to read active fault codes, refer to Diagnostic Fault Codes, Procedure 101-007. If fault codes are active, contact a Cummins Authorized Repair Facility.
OK Go To Next Step	
STEP 3 Fuel leak	Check the fuel lines, fuel connections, and fuel filters for leaks. Check the fuel lines to the supply tanks. Refer to the OEM service manual.
OK Go To Next Step	
STEP 4 Hubometer or odometer is miscalibrated	Check the hubometer and odometer calibrations. Calibrate or replace the hubometer or odometer, if necessary. Calculate fuel consumption with new mileage figures.
OK Go To Next Step	
STEP 5 Air intake or exhaust leaks	Check for loose or damaged piping connections and missing pipe plugs. Check the turbocharger and exhaust manifold mounting. Refer to Procedure 010-033.
OK Go To Next Step	
STEP 6 Air intake system restriction is above specification	Check the air intake system for restriction. Clean or replace the air filter and inlet piping as necessary. Refer to Procedure 010-058.
OK Go To Next Step	
STEP 7 Equipment and environmental factors are affecting fuel consumption	Consider ambient temperatures, wind, tire size, axle alignment, routes, and use of aerodynamic aids when evaluating fuel consumption.
OK Go To Next Step	
STEP 8 Lubricating oil level is above specification	Check the oil level. Verify the dipstick calibration and oil pan capacity. Fill the system to the specified level. Refer to Procedure 007-043.
OK Go To Next Step	
STEP 9 Contact a Cummins® Authorized Repair Facility	

Downloaded from www.Manualslib.com manuals search engine

Fuel in Coolant

Cause		Correction
STEP 1 Bulk coolant supply is contaminated	....	Check the bulk coolant supply. Drain the coolant and replace with noncontaminated coolant. Replace the coolant filters. Replace the coolant filter. Refer to Procedure 008-006.

OK

Go To Next Step

STEP 2

Contact a Cummins® Authorized Repair Facility

Downloaded from www.Manualslib.com manuals search engine

Fuel in the Lubricating Oil

Cause	Correction
STEP 1 Bulk oil supply is contaminated	Check the bulk oil supply. Drain the oil and replace with noncontaminated oil. Replace the oil filters.
OK Go To Next Step	
STEP 2 Engine idle time is excessive	Low oil and coolant temperatures can be caused by long idle time (greater than 10 minutes). Shut off the engine rather than idle for long periods. If idle time is necessary, raise the idle speed.
OK Go To Next Step	
STEP 3 Contact a Cummins® Authorized Repair Facility	

Downloaded from www.Manualslib.com manuals search engine

Intake Manifold Air Temperature Above Specification

Cause	Correction
STEP 1 Fan drive belt is broken	Check the fan drive belt. Replace the belt, if necessary. Refer to Procedure 008-036.
OK Go To Next Step	
STEP 2 Fan drive belt is loose	Check the belt tension and tighten if necessary.
OK Go To Next Step	
STEP 3 Cold weather radiator cover or winterfront is closed	Open the cold weather radiator cover or the winterfront. Maintain a minimum of 387 cm^2 [60 in^2] of opening at all times. Refer to Procedure 101-004.
OK Go To Next Step	
STEP 4 Charge air cooler fins, radiator fins, or air conditioner condenser fins are damaged or obstructed with debris	Inspect the charge air cooler, air conditioner condenser, and radiator fins. Clean, if necessary. Refer to Procedure 010-027 and the OEM service manual.
OK Go To Next Step	
STEP 5 Intake manifold temperature gauge is malfunctioning, if equipped	Test the temperature gauge. Refer to the OEM service manual.
OK Go To Next Step	
STEP 6 Electronic fault codes are active	For instructions on how to read active fault codes, refer to Diagnostic Fault Codes, Procedure 101-007. If fault codes are active, contact a Cummins Authorized Repair Facility.
OK Go To Next Step	
STEP 7 Programmable parameters or selected features are **not** correct	Check the programmable parameters and the selected features with an electronic service tool. Set the parameters and features again if necessary. Refer to a Cummins Authorized Repair Facility.
OK Go To Next Step	
STEP 8 Fan drive or fan controls are malfunctioning	Check the fan drive and controls. Refer to the OEM service manual.
OK Go To Next Step	

Downloaded from www.Manualslib.com manuals search engine

Intake Manifold Air Temperature Above Specification

Cause	Correction
STEP 9 Fan is **not** correct	Check the fan part number and compare it to the OEM-specified part number. Replace fan if necessary. Refer to the OEM service manual.
OK Go To Next Step	
STEP 10 Fan shroud is damaged or missing or the air recirculation baffles are damaged or missing	Inspect the shroud and the recirculation baffles. Repair, replace, or install, if necessary. Refer to the OEM service manual.
OK Go To Next Step	
STEP 11 Vehicle speed is too low for adequate cooling with high engine load	Reduce the engine load. Increase the engine (fan) rpm by downshifting.
OK Go To Next Step	
STEP 12 Exhaust system leaking hot air into engine compartment	Check the exhaust plumbing for leaks or broken components. Refer to the OEM service manual.
OK Go To Next Step	
STEP 13 Vehicle cooling system is **not** adequate	Verify that the engine and vehicle cooling systems are using the correct components. Refer to the OEM service manual.
OK Go To Next Step	
STEP 14 Fan is **not** an adequate size for the application	Verify that the fan is the correct size. Refer to the OEM service manual.
OK Go To Next Step	
STEP 15 Contact a Cummins® Authorized Repair Facility	

Downloaded from www.Manualslib.com manuals search engine

Intake Manifold Pressure (Boost) is Below Normal

Cause	Correction
STEP 1 Air intake or exhaust leaks	Check for loose or damaged piping connections and missing pipe plugs. Check the turbocharger and exhaust manifold mounting. Refer to Procedure 010-033.
OK Go To Next Step	
STEP 2 Air intake system restriction is above specification	Check the air intake system for restriction. Clean or replace the air filter and inlet piping as necessary. Refer to Procedure 010-058.
OK Go To Next Step	
STEP 3 Charge air cooler is restricted or leaking	Inspect the charge air cooler for air restrictions or leaks. Refer to Procedure 010-027.
OK Go To Next Step	
STEP 4 Electronic fault codes are active	For instructions on how to read active fault codes, refer to Diagnostic Fault Codes, Procedure 101-007. If fault codes are active, contact a Cummins Authorized Repair Facility.
OK Go To Next Step	
STEP 5 Engine power output is low	Refer to Engine Power Output is Low symptom tree.
OK Go To Next Step	
STEP 6 Contact a Cummins® Authorized Repair Facility	

Downloaded from www.Manualslib.com manuals search engine

Lubricating Oil Consumption Excessive

Cause	Correction
STEP 1 Verify the oil consumption rate	Check the amount of oil added versus the mileage.
OK Go To Next Step	
STEP 2 Lubricating oil leak (external)	Inspect the engine for external oil leaks. Tighten the capscrews, pipe plugs, and fittings. Replace gaskets, if necessary. Refer to Lubricating Oil Recommendations and Specifications.
OK Go To Next Step	
STEP 3 Crankcase ventilation system is plugged	Check and clean the crankcase breather and vent tube. Refer to Procedure 003-018.
OK Go To Next Step	
STEP 4 Lubricating oil does **not** meet specifications for operating conditions	Change the oil and filters. Refer to Procedure 007-002. Use the oil recommended in Section V.
OK Go To Next Step	
STEP 5 Lubricating oil drain interval is excessive	Verify the correct lubricating oil drain interval. Refer to Procedure 102-002.
OK Go To Next Step	
STEP 6 Air compressor is pumping lubricating oil into the air system	Check the air lines for carbon buildup and lubricating oil. Refer to Procedure 012-014.
OK Go To Next Step	
STEP 7 Lubricating oil level is above specification	Check the oil level. Verify the dipstick calibration and oil pan capacity. Fill the system to the specified level. Refer to Procedure 007-002.
OK Go To Next Step	
STEP 8 Turbocharger oil seal is leaking	Check the turbocharger compressor and turbine seals. Contact a Cummins Authorized Repair Facility.
OK Go To Next Step	
STEP 9 Lubricating oil is contaminated with coolant or fuel	Contact a Cummins Authorized Repair Facility.
OK Go To Next Step	
STEP 10 Contact a Cummins® Authorized Repair Facility	

Downloaded from www.Manualslib.com manuals search engine

Lubricating Oil Contaminated

Cause	Correction
STEP 1 Fuel in the lubricating oil	Refer to the Fuel in the Lubricating Oil symptom tree.
OK — Go To Next Step	
STEP 2 Internal coolant leaks	Refer to the Coolant Loss - Internal symptom tree.
OK — Go To Next Step	
STEP 3 Bulk oil supply is contaminated	Check the bulk oil supply. Drain the oil and replace with noncontaminated oil. Replace the oil filters.
OK — Go To Next Step	
STEP 4 Contact a Cummins® Authorized Repair Facility	

Downloaded from www.Manualslib.com manuals search engine

Lubricating Oil Pressure High

Cause	Correction
STEP 1 Coolant temperature is below specification	Refer to the Coolant Temperature is Below Normal symptom tree.
OK Go To Next Step	
STEP 2 Lubricating oil does **not** meet specifications for operating conditions	Change the oil and filters. Refer to Procedure 007-002. Use the oil recommended in Section V.
OK Go To Next Step	
STEP 3 Lubricating oil pressure switch, gauge, or sensor is malfunctioning or is **not** in the correct location	Check the oil pressure switch, gauge, or sensor for correct operation and location. Refer to the OEM service manual.
OK Go To Next Step	
STEP 4 Lubricating oil pressure sensor or circuit is malfunctioning (electronic controlled fuel system)	Check the lubricating oil pressure sensor and circuit. Refer to a Cummins Authorized Repair Facility.
OK Go To Next Step	
STEP 5 Electronic fault codes are active	For instructions on how to read active fault codes, refer to Diagnostic Fault Codes, Procedure 101-007. If fault codes are active, contact a Cummins Authorized Repair Facility.
OK Go To Next Step	
STEP 6 Contact a Cummins® Authorized Repair Facility	

Downloaded from www.Manualslib.com manuals search engine

Lubricating Oil Pressure Low

Cause	Correction
STEP 1 Lubricating oil pressure switch, gauge, or sensor is malfunctioning or is **not** in the correct location	Check the oil pressure switch, gauge, or sensor for correct operation and location. Refer to the OEM service manual.
OK Go To Next Step	
STEP 2 Lubricating oil level is above or below specification	Check the oil level. Add or drain oil, if necessary. Refer to Procedure 007-002.
OK Go To Next Step	
STEP 3 Lubricating oil filter is plugged	Change the oil and filter. Refer to Section Procedure 007-002. Review the oil change interval. Refer to Section V.
OK Go To Next Step	
STEP 4 Lubricating oil leak (external)	Inspect the engine for external oil leaks. Tighten the capscrews, pipe plugs, and fittings. Replace gaskets, if necessary. Refer to Procedure 018-003.
OK Go To Next Step	
STEP 5 Lubricating oil does **not** meet specifications for operating conditions	Change the oil and filters. Refer to Procedure 007-002. Use the oil recommended in Section V.
OK Go To Next Step	
STEP 6 Lubricating oil is contaminated with coolant or fuel	Contact a Cummins Authorized Repair Facility.
OK Go To Next Step	
STEP 7 Engine angularity during operation exceeds specification	Refer to to the engine performance curves and data sheet.
OK Go To Next Step	
STEP 8 Lubricating oil pressure sensor or circuit is malfunctioning (electronic controlled fuel system)	Check the lubricating oil pressure sensor and circuit. Refer to the OEM service manual.
OK Go To Next Step	
STEP 9 Electronic fault codes are active	For instructions on how to read active fault codes, refer to Diagnostic Fault Codes, Procedure 101-007. If fault codes are active, contact a Cummins Authorized Repair Facility.
OK Go To Next Step	

Downloaded from www.Manualslib.com manuals search engine

Lubricating Oil Pressure Low

Cause	Correction
STEP 10 Contact a Cummins® Authorized Repair Facility	

Downloaded from www.Manualslib.com manuals search engine

Lubricating Oil Sludge in the Crankcase Excessive

Cause	Correction
STEP 1 Bulk oil supply is contaminated	Check the bulk oil supply. Drain the oil and replace with noncontaminated oil. Replace the oil filters.
OK — Go To Next Step	
STEP 2 Coolant temperature is below specification	Refer to the Coolant Temperature Below Normal symptom tree.
OK — Go To Next Step	
STEP 3 Crankcase ventilation system is plugged	Check and clean the crankcase breather and vent tube. Refer to Procedure 003-018.
OK — Go To Next Step	
STEP 4 Fuel grade is **not** correct for the application or the fuel quality is poor	Operate the engine from a tank of high-quality fuel. Refer to Fuel Recommendations and Specifications Procedure 018-002.
OK — Go To Next Step	
STEP 5 Lubricating oil does **not** meet specifications for operating conditions	Change the oil and filters. Refer to Procedure 018-003. Use the oil recommended in Section V.
OK — Go To Next Step	
STEP 6 Contact a Cummins® Authorized Repair Facility	

Downloaded from www.Manualslib.com manuals search engine

Smoke, Black — Excessive

Cause	Correction
STEP 1 Electronic fault codes are active	For instructions on how to read active fault codes, refer to Diagnostic Fault Codes Procedure 101-007. If fault codes are active, contact a Cummins Authorized Repair Facility.
OK — Go To Next Step	
STEP 2 Air intake system restriction is above specification	Check the air intake system for restriction. Clean or replace the air filter and inlet piping as necessary. Refer to Procedure 010-033.
OK — Go To Next Step	
STEP 3 Air intake or exhaust leaks	Check for loose or damaged piping connections and missing pipe plugs. Check the turbocharger and exhaust manifold mounting. Refer to the OEM service manual.
OK — Go To Next Step	
STEP 4 Charge air cooler is restricted or leaking	Inspect the charge air cooler for air restrictions or leaks. Refer to Procedure 010-027.
OK — Go To Next Step	
STEP 5 Contact a Cummins® Authorized Repair Facility	

Downloaded from www.Manualslib.com manuals search engine

Smoke, White — Excessive

Cause	Correction
STEP 1 Engine is cold	Allow the engine to warm to operating temperature. If the engine will **not** reach operating temperature, refer to Coolant Temperature Below Normal symptom tree.
OK Go To Next Step	
STEP 2 Engine is operating at low ambient temperature	Check the winterfront, shutters, and under-the-hood air. Use under-the-hood intake air in cold weather. Refer to Cold Weather Operation, Bulletin 3387266.
OK Go To Next Step	
STEP 3 Starting aid is necessary for cold weather or starting aid is malfunctioning	Check for the correct operation of the starting aid. Refer to the manufacturer's instructions. Refer to Cold Weather Starting Procedure 101-004 Section 1.
OK Go To Next Step	
STEP 4 Electronic fault codes are active	For instructions on how to read active fault codes, refer to Diagnostic Fault Codes Procedure 101-007. If fault codes are active, contact a Cummins Authorized Repair Facility.
OK Go To Next Step	
STEP 5 Fuel grade is **not** correct for the application or the fuel quality is poor	Operate the engine from a tank of high-quality fuel. Refer to Fuel Recommendations and Specifications Procedure 018-002.
OK Go To Next Step	
STEP 6 Air intake or exhaust leaks	Check for loose or damaged piping connections and missing pipe plugs. Check the turbocharger and exhaust manifold mounting. Refer to Procedure 010-033.
OK Go To Next Step	
STEP 7 Air intake system restriction is above specification	Check the air intake system for restriction. Clean or replace the air filter and inlet piping as necessary. Refer to Procedure 010-058.
OK Go To Next Step	
STEP 8 Charge air cooler is restricted or leaking	Inspect the charge air cooler for air restrictions or leaks. Refer to Procedure 010-027.
OK Go To Next Step	
STEP 9 Contact a Cummins® Authorized Repair Facility	

Downloaded from www.Manualslib.com manuals search engine

Turbocharger Leaks Engine Oil or Fuel

Cause	Correction
STEP 1 Engine is operating for extended periods under light- or no-load conditions (slobbering)	Review the engine operating instructions in Section 1.
OK Go To Next Step	
STEP 2 Air intake system restriction is above specification	Check the air intake system for restriction. Clean or replace the air filter and inlet piping as necessary. Refer to Procedure 010-058.
OK Go To Next Step	
STEP 3 Exhaust system restriction is **not** within specification	Check the exhaust system for restrictions. Contact a Cummins Authorized Repair Facility.
OK Go To Next Step	
STEP 4 Lubricating oil lines leak oil	Check all oil lines and fittings for leaks. Tighten loose fittings and replace leaking oil lines if necessary.
OK Go To Next Step	
STEP 5 Crankcase ventilation system is plugged	Check and clean the crankcase breather and vent tube. Refer to Procedure 003-018.
OK Go To Next Step	
STEP 6 Turbocharger oil seal is leaking	Check the turbocharger compressor and turbine seals. Contact a Cummins Authorized Repair Facility.
OK Go To Next Step	
STEP 7 Lubricating oil or fuel is entering the turbocharger	Remove the intake and exhaust piping, and check for oil or fuel.
OK Go To Next Step	
STEP 8 White smoke is present	Refer to the Smoke, White - Excessive symptom tree.
OK Go To Next Step	
STEP 9 Contact a Cummins® Authorized Repair Facility	

Downloaded from www.Manualslib.com manuals search engine

Notes

Downloaded from www.Manualslib.com manuals search engine

Section V - Maintenance Specifications

Section Contents

	Page
Air Intake System	V-5
Specifications	V-5
Capscrew Markings and Torque Values	V-20
Capscrew Markings and Torque Values - Metric	V-20
Capscrew Markings and Torque Values - U.S. Customary	V-21
General Information	V-20
Coolant Recommendations and Specifications	V-13
Cooling System Sealing Additives	V-15
Cooling System Soluble Oils	V-16
Fully Formulated Coolant/Antifreeze	V-13
Cooling System	V-4
Specifications	V-4
Cummins®/Fleetguard® Filter Specifications	V-8
General Information	V-8
Drive Belt Tension	V-17
Tension Chart	V-17
Electrical System	V-7
Batteries (Specific Gravity)	V-7
Engine Component Torque Values	V-18
Torque Table	V-18
Exhaust System	V-6
Specifications	V-6
Fuel Recommendations and Specifications	V-9
Fuel Recommendations	V-9
Fuel System	V-2
Specifications	V-2
Cummins Common Rail Fuel System	V-2
CAPS Fuel System	V-2
General Engine	V-1
Specifications	V-1
Lubricating Oil Recommendations and Specifications	V-10
AfterMarket Oil Additive Usage	V-12
General Information	V-10
New Engine Break-in Oils	V-12
Lubricating Oil System	V-3
Specifications	V-3
Sealants	V-19
General Information	V-19

Downloaded from www.Manualslib.com manuals search engine

This Page Left Intentionally Blank

Downloaded from www.Manualslib.com manuals search engine

General Engine

Specifications

Listed below are the general specifications for this engine.

Horsepower....................See engine dataplate
Firing Order....................1-5-3-6-2-4
Crankshaft Rotation (viewed from front of engine).................... **Clockwise**
Bore and Stroke
8.3 liters....................114 mm [4.49 in] x 135 mm [5.32 in]
8.9 liters....................114 mm [4.49 in] x 144.5 mm [5.69 in]
Dry Weight
8.3 liters....................694 kg [1530 lb]
8.9 liters....................706 kg [1555 lb]
Wet Weight
8.3 liters....................723 kg [1595 lb]
8.9 liters....................738 kg [1625 lb]
Overhead Adjustment
Intake Valve Adjustment....................0.305 mm [0.012 in]
Exhaust Valve Adjustment....................0.559 mm [0.022 in]
Engine Brake Adjustment....................2.286 mm [0.090 in]

Downloaded from www.Manualslib.com manuals search engine

Fuel System

Specifications

Cummins Common Rail Fuel System

Maximum Fuel Return Line Pressure
  All Applications Except Marine....254 mm Hg [10 in Hg]
  Marine Applications....102 mm Hg [4 in Hg]
Maximum Fuel Inlet Restriction (gear pump inlet)
  All Applications Except Marine....304.8 mm Hg [10 in Hg]
Maximum Fuel Inlet Restriction - At OEM Connection (dirty filter) Loaded Condition
  All Application Except Marine....203.2 mm Hg [8 in Hg]
  Marine Applications....102 mm Hg [4.0 in Hg]
Maximum Fuel Inlet Restriction - At OEM Connection (clean filter) Loaded Condition
  Marine Applications....63.5 mm Hg [2.5 in Hg]
Minimum Gear Pump Pressure (during cranking)
  During Cranking Condition....69 kPa [10 psi]
  During Rated Condition....483 kPa [70 psi]
Maximum Filter Pressure Drop....138 kPa [20 psi]
Minimum Lift Pump Pressure (gear pump inlet during cranking)....35 kPa [5 psi]
Minimum Engine Cranking Speed....150 rpm

CAPS Fuel System

Maximum Fuel Inlet Restriction at Rated (measured at lift pump inlet)....102 mm Hg [4 in Hg]
Maximum Fuel Inlet Restriction at Rated (measured at CAPS pump inlet)....254 mm Hg [10 in Hg]
Minimum Lift Pump Pressure....35 kPa [5 psi]
Maximum Filter Pressure Drop at Rated....102 mm Hg [4 in Hg]
Minimum Gear Pump Pressure (during cranking)....69 kPa [10 psi]
Minimum Engine Cranking Speed....150 rpm

Downloaded from www.Manualslib.com manuals search engine

Lubricating Oil System

Specifications

Oil Pressure

At Low Idle (minimum allowable)....69 kPa [10 psi]
At Rated Speed (minimum allowable)....207 kPa [30 psi]

Regulated Oil Pressure....517 kPa [75 psi]
Lubricating Oil Filter Capacity....3.78 liters [4 qt]

Oil Pan Capacity, Low to High (8.3 liter engines)

Standard Oil Pan....15.1 to 18.9 liters [16 to 20 qt]
Standard Oil Pan with Cylinder Block Stiffener Plate....16.1 to 19.9 liters [17 to 21 qt]

Total System Capacity (Oil Pan and New Oil Filter) (8.3 liter engines)

Standard Oil Pan....22.7 liters [24 qt]
Standard Oil Pan with Cylinder Block Stiffener Plate....23.7 liters [25 qt]

Oil Pan Capacity, Low to High (8.9 liter engines)

Standard Oil Pan....18.9 to 22.7 liters [20 to 24 qt]
Standard Oil Pan with Cylinder Block Stiffener Plate....19.9 to 23.7 liters [21 to 25 qt]
Large Oil Pan "Power Generation" with Cylinder Block Stiffener Plate....20.5 to 29.9 liters [21.1 to 31.7 qt]

Total System Capacity (Oil Pan and New Oil Filter) (8.9 liter engines)

Standard Oil Pan....26.5 liters [28 qt]
Standard Oil Pan With Cylinder Block Stiffener Plate....27.4 liters [29 qt]
Large Oil Pan "Power Generation" with Cylinder Block Stiffener Plate....33.7 liters [35.7 qt]

Downloaded from www.Manualslib.com manuals search engine

Cooling System

Specifications

Coolant Capacity (engine **only**)....11.1 liters [11.7 qt]
Standard Modulating Thermostat Range....82 to 93°C [180 to 200°F]
Recommended Pressure Cap....103 kPa [15 psi]
Minimum Fill Rate (without low-level alarm)....19 liters/min [5 gpm]
Maximum Deaeration Time....25 minutes
Maximum Top Tank Coolant Temperature With CAPS Fuel System....100°C [212°F]
Maximum Top Tank Coolant Temperature With Cummins Common Rail Fuel System....107°C [225°F]

Winterfronts - Automotive Only

Air Passage Area....774 cm^2 [120 in^2]

Downloaded from www.Manualslib.com manuals search engine

Air Intake System

Specifications

CAUTION

Engine intake air must be filtered to prevent dirt and debris from entering the engine. If the air intake piping is damaged or loose, unfiltered air will enter the engine and cause premature wear.

Maximum Intake Restriction

Clean Air Filter Element....254 mm H_2O [10 in H_2O]

Dirty Air Filter Element....635 mm H_2O [25 in H_2O]

Charge-Air Cooler Restriction (maximum)....152 mm Hg [6.0 in Hg]

Downloaded from www.Manualslib.com manuals search engine

Exhaust System

Specifications

Maximum Exhaust Restriction - Muffler
Hg....76 mm Hg [3 in Hg]
H_2O.... 1016 mm H_2O [40 in H_2O]
Exhaust Restriction - Diesel Oxidation Catalyst....114 mm Hg [4.5 in Hg]
Exhaust Restriction - Exhaust Gas Filter....140 mm Hg [5.5 in Hg]

Downloaded from www.Manualslib.com manuals search engine

Electrical System

Batteries (Specific Gravity)

Specific Gravity at 27°C [80°F]	State of Charge
1.260 to 1.280	100 percent
1.230 to 1.250	75 percent
1.200 to 1.220	50 percent
1.170 to 1.190	25 percent
1.110 to 1.130	Discharged

Downloaded from www.Manualslib.com manuals search engine

Cummins®/Fleetguard® Filter Specifications

General Information

Cummins Filtration™ is a subsidiary of Cummins Inc. Cummins Filtration™ filters are developed through joint testing at Cummins Inc. and Cummins Filtration™. Cummins Filtration™ filters are standard on new Cummins® engines. Cummins Inc. recommends their use.

Cummins Filtration™ products meet all Cummins® Source Approval Test standards to provide the quality filtration necessary to achieve the engine's design life. If other brands are substituted, the purchaser should insist on products that the supplier has tested to meet Cummins Inc. high-quality standards.

Cummins Inc. can **not** be responsible for problems caused by non-genuine filters that do **not** meet Cummins Inc. performance or durability requirements.

Filter Part Numbers (All Applications Except Marine)				
-	**Coolant Filter**	**Water-separating Filter**	**Fuel Filter**	**Lubricating Oil Filter**
Without CM850	-	-	-	-
Cummins® Part Number	3100304[1], 3098690[2]	3944269	N/A	3401544
Cummins Filtration™ Part Number	WF2071[1], WF2123[2]	FS1022	N/A	LF9009
With CM850	-	-	-	-
Cummins® Part Number	3100304[1], 3098690[2]	4070801	3959612	3401544
Cummins Filtration™ Part Number	WF2071[1], WF2123[2]	FS1003	FF5488	LF9009

1 This filter is designed for service intervals up to 40,234 km [25,000 miles] when using TMC RP329/RP330 or ASTM D6210 coolants that meet Cummins® Engineering Standard CES 14603. The filter is designed for cooling systems up to 45 liters [12 gallons]. Refer to Cummins® Coolant Requirements and Maintenance, Bulletin 3666132. If the coolant system capacity is greater than 45 liters [12 gallons], one unit of chemical per 3 system gallons is required for adequate system treatment. If needed, contact Cummins Filtration™ (Toll Free - (800) 223-4583)) for other coolant filter options for different size cooling systems.

2 This filter has been designed for extended service intervals of 80,467 to 241,402 km [50,000 to 150,000 miles]. It has no chemical additives, as it contains zero units of DCA4. When using the WF2123 filter, the appropriate volumes of liquid treatment **must** be added at the designated distances/intervals. For a 25,000 mile service interval with RP329/RP330 coolants, one pint of DCA4 (or DCA2) liquid treatment should be added for cooling systems that do **not** exceed 45 liters [12 gallons]. For a 150,000 mile service interval with ES Compleat™ Coolant (ES Extender Liquid), one quart of this liquid treatment should be added for cooling systems that do **not** exceed 45 liters [12 gallons].

NOTE: An LF9009 lubricating oil filter **must** be used. A venturi type lubricating oil filter **must** be used in order to benefit from the bypass filtration section of the lubricating oil filter. Do **not** use an LF3000 lubricating oil filter. Engine durability will be reduced by the use of the wrong lubricating oil filter.

Downloaded from www.Manualslib.com manuals search engine

Fuel Recommendations and Specifications

Fuel Recommendations

WARNING

Do not mix gasoline, alcohol, or gasohol with diesel fuel. This mixture can cause an explosion.

CAUTION

Due to the precise tolerances of diesel injection systems, it is extremely important that the fuel be kept clean and free of dirt or water. Dirt or water in the system can cause severe damage to both the fuel pump and the fuel injectors.

Cummins Inc. recommends the use of ASTM number 2D fuel. The use of number 2 diesel fuel will result in optimum engine performance.

At operating temperatures below 0°C [32°F], acceptable performance can be obtained by using blends of number 2D and number 1D.

NOTE: Lighter fuels can reduce fuel economy.

NOTE: Engines equipped with diesel particulate filters require the use of diesel fuel with 30 ppm sulfur maximum. There are no acceptable substitutes.

The viscosity of the fuel **must** be kept above 1.3 cSt at 40°C [104°F] to provide adequate pumping and lubricating characteristics to fuel system components.

The following chart lists acceptable substitute fuels for this engine.

Acceptable Substitute Fuels									
Number 1D Diesel(1) (2) (3)	**Number 2D Diesel(3)**	**Number 1K Kerosene**	**Jet-A**	**Jet-A1**	**JP-5**	**JP-8**	**Jet-B**	**JP-4**	**CITE**
A	OK	**Not** OK	A	A	A	A	**Not** OK	**Not** OK	**Not** OK
An "A" means OK **only** if fuel lubricity is adequate. This means the BOCLE number is 3100 or greater as measured by ASTM specification D6078, Scuffing Load Ball On Cylinder Evaluator (SLBOCLE). Lubricity can also be measured by ASTM, specification D6079, ISO 12156, High Frequency Reciprocating Rig (HFRR) in which the fuel **must** have a wear scar diameter of 0.45 mm [0.02 in] or less.									
Any adjustment to compensate for reduced performance with a fuel system using alternate fuel is **not** warrantable.									
Winter blend fuels, such as found at commercial fuel-dispensing outlets, are combinations of number 1D and 2D diesel fuels and are acceptable.									

Additional information for fuel recommendations and specifications can be found in Fuel for Cummins Engines, Bulletin 3379001. See ordering information in the back of this manual.

Downloaded from www.Manualslib.com manuals search engine

Lubricating Oil Recommendations and Specifications

General Information

CAUTION

Extending the oil and filter change interval beyond the recommendations will decrease the engine life due to factors such as corrosion, deposits, and wear.

CAUTION

A sulfated ash limit of 1.85 percent has been placed on all engine lubricating oils recommended for use in Cummins engines. Higher ash oils can cause valve and/or piston damage and lead to excessive oil consumption.

The use of quality engine lubricating oils, combined with appropriate oil drain and filter change intervals, is a critical factor in maintaining engine performance and durability. Extending the oil and filter change interval beyond the recommendations will decrease engine life due to factors such as corrosion, deposits, and wear. Reference Procedure 102-002 in Section 2 to determine which oil drain interval to use for the application.

Cummins Inc. recommends the use of high-quality SAE 15W-40 heavy-duty engine oil, such as Valvoline® Premium Blue® (USA) or Valvoline Premium Blue Extra (International).

NOTE: The responsibility is with the owner. If recommendations are ignored, warranty could be affected.

API: American Petroleum Institue

CES: Cummins® Engineering Standard

ACEA - Association des Constructeurs European d' Association

JAMA - Japanese Automobile Manufacturerrs Association

Table 1: Cummins® Engineering Standards (CES) for Lubricants

Cummins Engineering Standard Classification (CES)	North American Classification	International Classifications	Comments
Obsolete. Do **not** use.	API CD API CE	ACEA E-1	Obsolete. Do **not** use.
	API CG-4/SH		
CES-20075[1]	API CF-4/SG	ACEA E-2	Minimum acceptable oil classification for MidRange engines, but is **not** recommended.
		ACEA E-3	
		JAMA DH-1	
CES-20071[2]	API CH-4 4/SJ	ACEA E5	Acceptable oil classification for MidRange engines.
CES-20076[2]			
CES-20077[2]			
CES-20078	API CI-4	ACEA E7	Excellent oil for MidRange engines.
CES-20081	API1 CJ-4	ACEA E9	Excellent oil for MidRange engines where ultra-low sulfur diesel fuel is used.[3]
		JAMA DH-2	

Table Notes

1 For MidRange engines, in areas where CH-4/SJ or CG-4/SH oils are **not** available, refer to the oil drain intervals in Section 2. As an alternative, oils meeting CES-20075 can be used, but the oil drain interval and filter change interval **must** be reduced by half.

2 Outside North America, where oil meeting CES-20071, CES-20076, or CES20077 might **not** be available, Cummins Inc. primary recommendation is for an oil meeting Global DHD-1, as jointly developed by EMA, ACEA, and JAMA.

3 Ultra-low sulfur diesel fuel is defined as diesel fuel **not** exceeding 0.0015 (15 ppm) mass percent sulfur content (ultra-low diesel fuel is also defined by ASTM S-15).

A sulfated ash limit of 1.0 mass percent is suggested for optimum valve and piston deposit and oil consumption control.

Downloaded from www.Manualslib.com manuals search engine

For further details and discussion of engine lubricating oils for Cummins engines, refer to Cummins Engine Oil Recommendations, Bulletin 3810340.

The API service symbols are shown in the accompanying illustration. The upper half of the symbols display the appropriate oil categories.

The lower half can contain words to describe oil energy-conserving features.

The center section identifies the SAE oil viscosity grade.

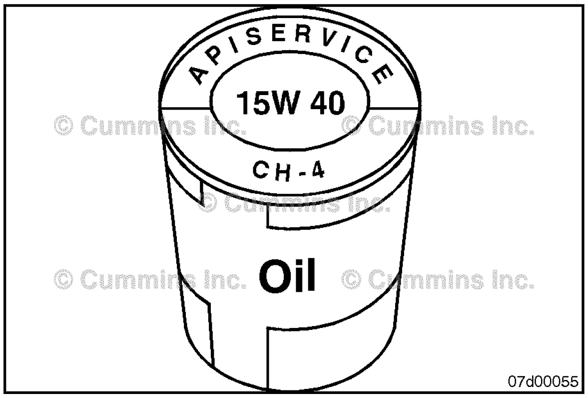

As the engine oil becomes contaminated, essential oil additives are depleted. Lubricating oils protect the engine as long as these additives are functioning properly. Progressive contamination of the oil between oil and filter change intervals is normal. The amount of contamination will vary, depending on the operation of the engine, kilometers or miles on the oil, fuel consumed, and new oil added.

Extending oil and filter change intervals beyond the recommendations will decrease engine life due to factors such as corrosion, deposits, and wear.

Reference the oil drain chart in this section to determine which oil drain interval to use for your application.

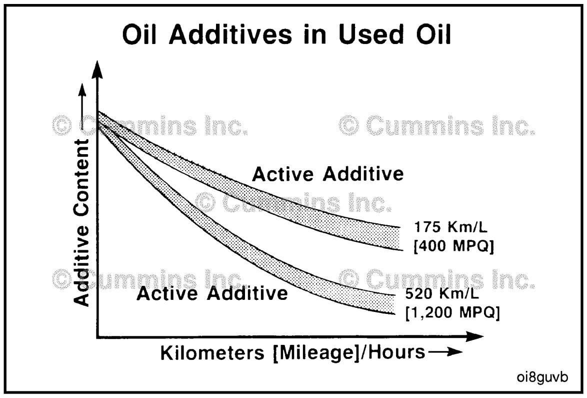

Downloaded from www.Manualslib.com manuals search engine

The primary Cummins Inc. recommendation is for the use of 15W-40 multigrade lubricating oil for normal operation at ambient temperatures above -15°C [5°F]. The use of multigrade oil reduces deposit formation, improves engine cranking in low temperature conditions, and increases engine durability by maintaining lubrication during high temperature operating conditions. Since multigrade oils have been shown to provide approximately 30 percent lower oil consumption compared with monograde oils, it is important to use multigrade oils to be certain the engine will meet applicable emissions requirements.

Use of "synthetic engine oils" (those made with API group 3 or group 4 base stocks) is permitted, subject to the same performance and viscosity limitations of petroleum (mineral) based engine oils. The same oil change intervals that are applied to petroleum (mineral) based engine oils **must** be applied to synthetic oils.

For further details and discussion of engine lubricating oils for Cummins® engines, refer to the latest revision of Cummins® Engine Oil Recommendations, Bulletin 3810340.

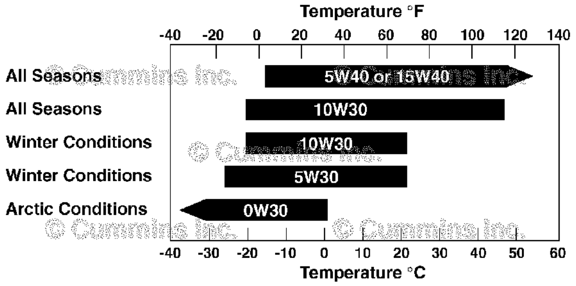

07d00260

While the preferred viscosity grade is 15W-40, lower viscosity multigrade oils can be used in colder climates. See the accompanying chart. Any viscosity grade lower than 15W-40 must still meet CES 20081.

Synthetic engine oils, API Group III and Group IV basestocks, are recommended for use in Cummins® engines operating in ambient temperature conditions consistently below -25°C [-13°F]. Synthetic 0W-30 oils that meet the requirements of API Group III or Group IV basestocks, can be used in operations where the ambient temperature never exceeds 0°C [32°F]. Multiviscosity oils rated 0W-30 do **not** offer the same level of protection against fuel dilution as do higher multigrade oils. Higher cylinder wear can be experienced when using 0W-30 oils in high-load situations.

As these oils have directionally thinner oil films than 15W-40 oils, top-quality Fleetguard® filters **must** be used above 20°C [70°F]. Some oil suppliers might claim better fuel economy for these oils. Cummins Inc. can neither approve nor disapprove any product **not** manufactured by Cummins Inc. These claims are between the customer and the oil supplier. Obtain a commitment from the oil supplier that the oil will give satisfactory performance in Cummins® engines, or do **not** use the oil.

New Engine Break-in Oils

Special “break-in” engine lubricating oils are **not** recommended for new or rebuilt Cummins® engines. Use the same type of oil during the break-in as is used in normal operation.

AfterMarket Oil Additive Usage

Cummins Inc. does **not** recommend the use of aftertreatment oil additives. Present high-quality fully additive engine lubricating oils are very sophisticated, with precise amounts of additives blended into the lubricating oil to meet stringent requirements. These oils meet performance characteristics that conform to the lubricant industry standards. Aftermarket lubricating oil additives are **not** necessary to enhance engine oil performance, and in some cases, can reduce the finished oil's ability to protect the engine.

Downloaded from www.Manualslib.com manuals search engine

Coolant Recommendations and Specifications

Fully Formulated Coolant/Antifreeze

Cummins Inc. recommends the use of fully formulated antifreeze/coolant meeting Cummins® Engineering Standard (C.E.S.) 14603. For further details and discussion of coolant for Cummins® engines, refer to Coolant Requirements and Maintenance, Bulletin 3666132.

Cummins Inc. recommends using either a 50/50 mixture of good-quality water and fully formulated antifreeze, or fully formulated coolant when filling the cooling system.

Good-quality water is important for cooling system performance. Excessive levels of calcium and magnesium contribute to scaling problems, and excessive levels of chlorides and sulfates cause cooling system corrosion.

Water Quality	
Calcium Magnesium (hardness)	**Maximum 170 ppm as ($CaCO_3$ + $MgCO^3$)**
Chloride	40 ppm as (Cl)
Sulfur	100 ppm as (SO_4)

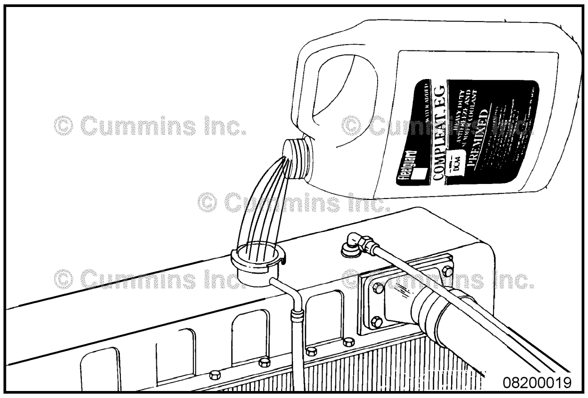

08200019

Downloaded from www.Manualslib.com manuals search engine

oi805vn

Cummins Inc. recommends Cummins Filtration™ antifreeze coolants including Compleat ES™ containing DCA4 Plus, Fleetcool™ EX containing DCA2 Plus, and ES Optimax™ Organic Acid Technology (OAT), which meet the requirements of Cummins® Engineering Standard 14603. However, Cummins Inc., Chevron Corporation and Shell have agreed that Chevron Texaco™, Shell Rotella™ and their private label counterpart Extended Life OAT coolants, which do **not** meet the elastomer compatibility section of Cummins® Engineering Standard 14603, are acceptable for extended service interval use, assuming the initial coolant fill requirements were met from the vehicle's original equipment manufacturer (OEM).

MidRange, Heavy Duty and High Horsepower engine overhauls, or repairs involving the replacement of the following components, using this Extended Life OAT coolant, **must** discard the coolant and replace it with new coolant.

- Rocker lever housing gasket
- Lubricating oil cooler housing gasket
- Cylinder head gasket
- Thermostat housing gasket

If the replacement coolant is Chevron Texaco™, Shell Rotella™ or their private label counterpart Extended Life OAT coolants, which do **not** meet the elastomer compatibility section of Cummins® Engineering Standard 14603, the coolant **must** be treated by adding 0.24 liters [8 oz] of liquid silicate fluid for every 45.5 liters [12 gal] of total coolant system volume. It is critical to **not** overtreat the coolant with silicate fluid.

To obtain order forms or ask questions relative to ordering the silicate fluid, contact:

- Silicate Fluid Order Program
- P.O. Box 27388
- Houston, TX
- 77277-7388
- Phone: 800-346-9041
- Fax: 800-876-5317

For further details and discussion of engine coolant for Cummins® engines, refer to Cummins® Coolant Requirements and Maintenance, Bulletin 3666132.

Downloaded from www.Manualslib.com manuals search engine

Fully formulated antifreeze **must** be mixed with good-quality water at a 50/50 ratio (40- to 60-percent working range). A 50/50 mixture of antifreeze and water gives a -36°C [-33°F] freezing point and a 108°C [226°F] boiling point, which is adequate for locations in North America. The actual lowest freezing point of ethylene glycol antifreeze is at 68 percent. Using higher concentrations of antifreeze will raise the freezing point of the solution and increase the possibility of a silica gel problem.

Legend

1 Freezing Point Temperature Scale

2 Boiling Point Temperature Scale

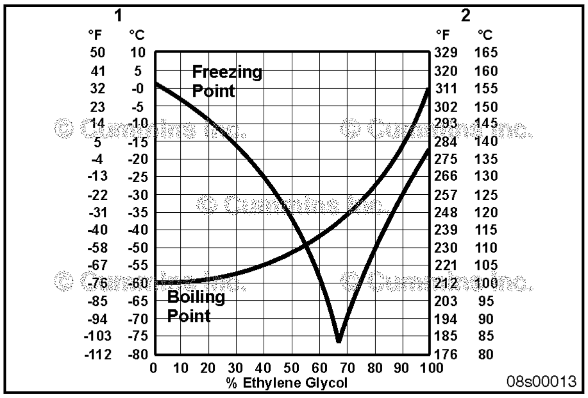

A refractometer **must** be used to measure the freezing point of the coolant accurately. Use Cummins Filtration™ refractometer, Part Number CC2800 or CC2806.

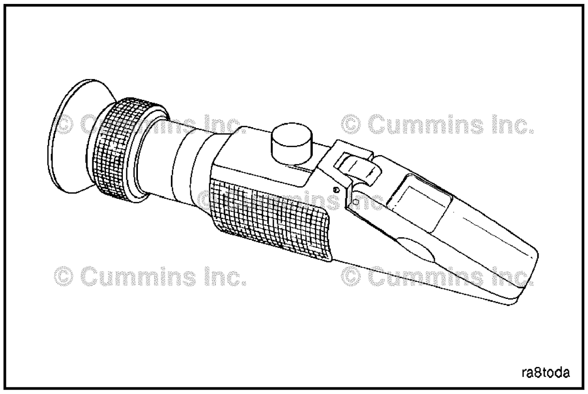

Do **not** use a floating ball hydrometer. Floating ball hydrometers can give incorrect readings.

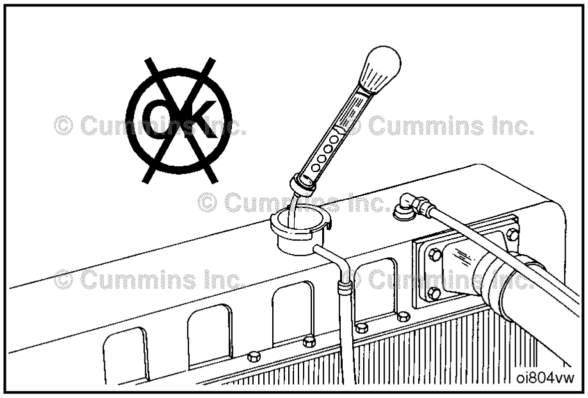

Cooling System Sealing Additives

Do **not** use sealing additives in the cooling system. The use of sealing additives will:

- Build up in coolant low-flow areas
- Plug the radiator and oil cooler
- Possibly damage the water pump seal.

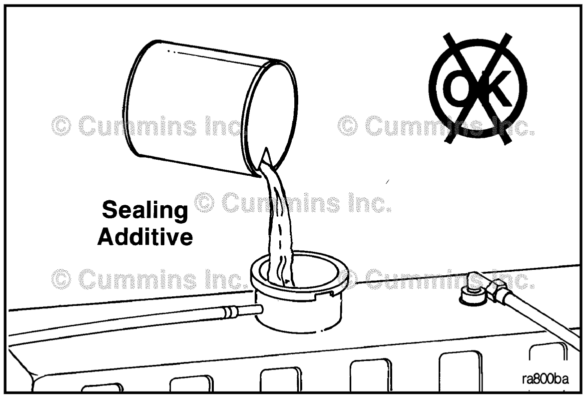

Downloaded from www.Manualslib.com manuals search engine

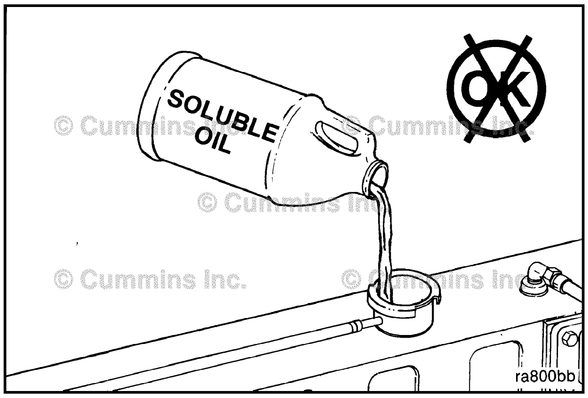

Cooling System Soluble Oils

Do **not** use soluble oils in the cooling system. The use of soluble oils will:

- Corrode brass and copper
- Damage heat transfer surfaces
- Damage seals and hoses.

Downloaded from www.Manualslib.com manuals search engine

Drive Belt Tension

Tension Chart

SAE Belt Size	Belt Tension Gauge Part No.		Belt Tension New		Belt Tension Range Used*	
	Click-type	Burroughs	N	lbf	N	lbf
0.380 in	3822524		620	140	270 to 490	60 to 110
0.440 in	3822524		620	140	270 to 490	60 to 110
1/2 in	3822524	ST-1138	620	140	270 to 490	60 to 110
11/16 in	3822524	ST-1138	620	140	270 to 490	60 to 110
3/4 in	3822524	ST-1138	620	140	270 to 490	60 to 110
7/8 in	3822524	ST-1138	620	140	270 to 490	60 to 110
4 rib	3822524	ST-1138	620	140	270 to 490	60 to 110
5 rib	3822524	ST-1138	670	150	270 to 530	60 to 120
6 rib	3822525	ST-1293	710	160	290 to 580	65 to 130
8 rib	3822525	ST-1293	890	200	360 to 710	80 to 160
10 rib	3822525	3823138	1110	250	440 to 890	100 to 200
12 rib	3822525	3823138	1330	300	530 to 1070	120 to 240
12 rib K section	3822525	3823138	1330	300	890 to 1070	200 to 240
31 rib	-	3164750	1668	375	1330 to 1560	300 to 350

NOTE: This chart does not apply to automatic belt tensioners.

* A belt is considered used if it has been in service for ten minutes or longer.

* If used belt tension is less than the minimum value, tighten the belt to the maximum used belt value.

Downloaded from www.Manualslib.com manuals search engine

Engine Component Torque Values

Torque Table

Component	Torque Value	
	N•m	ft-lb
Alternator Link	24	18
Alternator Mounting Bolt	43	32
Belt Tensioner Mounting	43	32
Crankshaft Damper and Pulley	200	148
Crossover Clamp	5	44 in-lb
Tee Bolt Type Clamp	8	71 in-lb
Exhaust Outlet Pipe, V Band Clamp	8	71 in-lb
Fan Bracket Mounting	24	18
Fan Pulley	43	32
Fuel Filter	Refer to Manufacturer's Specifications	
Lubricating Oil Filter	Refer to Manufacturer's Specifications	
Lubricating Oil Pan Drain Plug		
Steel Oil Pan	80	59
Cast Aluminum Oil Pan	60	44
Composite Oil Pan	60	44
Lubricating Oil Pan Heater Plug	120	89
Starting Motor Mounting	43	32
Rocker Lever Cover	12	106 in-lb

Downloaded from www.Manualslib.com manuals search engine

Sealants

General Information

Use the sealants listed below or sealants containing equivalent properties unless specified otherwise in a procedure or step.

Item Description	Sealing Method
Pipe Plugs	Precoated teflon or pipe sealer
Cup Plugs	Loctite™ 277 or 11,264
O-Rings	Lubriplate™ 105
Rear Camshaft Expansion Plug	Precoated or Loctite™ 59,241 liquid teflon
Fuel Block Mounting Studs	Loctite™ 609
Turbocharger Drain in Block	Loctite™ 277 or 11,264
Front Seal in Gear Cover	Loctite™ 277 or 11,264
Rear Seal in Rear Cover	No sealant
Oil Pan at T-Joint	Three-Bond™ 1207C (Cummins® Part Number 3823494)

Downloaded from www.Manualslib.com manuals search engine

Capscrew Markings and Torque Values

General Information

⚠CAUTION⚠

When replacing capscrews, always use a capscrew of the same measurement and strength as the capscrew being replaced. Using the wrong capscrews can result in engine damage.

Metric capscrews and nuts are identified by the grade number stamped on the head of the capscrew or on the surface of the nuts. U.S. Customary capscrews are identified by radial lines stamped on the head of the capscrew.

The following examples indicate how capscrews are identified:

Metric - M8-1.25 X 25

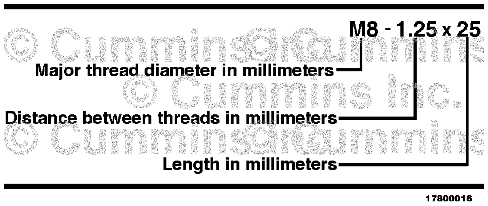

- **Always** use the torque values listed in the following tables when specific torque values are **not** available.
- Do **not** use the torque values in place of those specified in other sections of this manual.
- The torque values in the table are based on the use of lubricated threads.
- When the ft-lb value is less than 10, convert the ft-lb value to in-lb to obtain a better torque with an in-lb torque wrench. Example: 6 ft-lb equals 72 in-lb.

U.S. Customary [5/16 X 18 X 1-1/2]

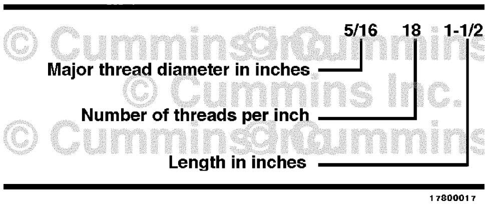

- **Always** use the torque values listed in the following tables when specific torque values are **not** available.
- Do **not** use the torque values in place of those specified in other sections of this manual.
- The torque values in the table are based on the use of lubricated threads.
- When the ft-lb value is less than 10, convert the ft-lb value to in-lb to obtain a better torque with an in-lb torque wrench. Example: 6 ft-lb equals 72 in-lb.

Capscrew Markings and Torque Values - Metric

Commercial Steel Class

8.8 **10.9** **12.9**

Capscrew Head Markings

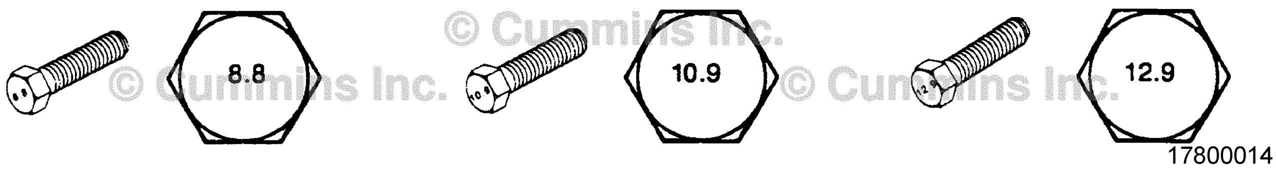

Body Size	Torque				Torque				Torque			
Diameter	Cast Iron		Aluminium		Cast Iron		Aluminium		Cast Iron		Aluminium	
mm	N•m	ft-lb	N•m	ft-lb	N•m	ft-lb	N•m	ft-lb	N•m	ft-lb	N•m	ft-lb
6	9	5	7	4	13	10	7	4	14	9	7	4
7	14	9	11	7	18	14	11	7	23	18	11	7

Downloaded from www.Manualslib.com manuals search engine

Body Size	Torque				Torque				Torque			
Diameter	Cast Iron		Aluminium		Cast Iron		Aluminium		Cast Iron		Aluminium	
mm	N•m	ft-lb	N•m	ft-lb	N•m	ft-lb	N•m	ft-lb	N•m	ft-lb	N•m	ft-lb
8	23	17	18	14	33	25	18	14	40	29	18	14
10	45	33	30	25	65	50	30	25	70	50	30	25
12	80	60	55	40	115	85	55	40	125	95	55	40
14	125	90	90	65	180	133	90	65	195	145	90	65
16	195	140	140	100	280	200	140	100	290	210	140	100
18	280	200	180	135	390	285	180	135	400	290	180	135
20	400	290	—	—	550	400	—	—	—	—	—	—

Capscrew Markings and Torque Values - U.S. Customary

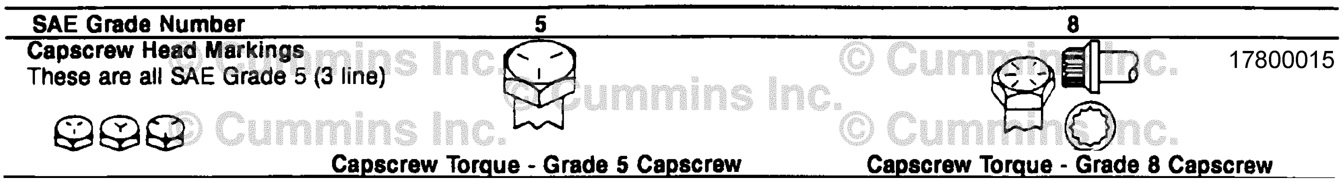

Capscrew Body Size	Cast Iron		Aluminium		Cast Iron		Aluminium	
	N•m	ft-lb	N•m	ft-lb	N•m	ft-lb	N•m	ft-lb
1/4 - 20	9	7	8	6	15	11	8	6
1/4 - 28	12	9	9	7	18	13	9	7
5/16 - 18	20	15	16	12	30	22	16	12
5/16 - 24	23	17	19	14	33	24	19	14
3/8 - 16	40	30	25	20	55	40	25	20
3/8 - 24	40	30	35	25	60	45	35	25
7/16 - 14	60	45	45	35	90	65	45	35
7/16 - 20	65	50	55	40	95	70	55	40
1/2 - 13	95	70	75	55	130	95	75	55
1/2 - 20	100	75	80	60	150	110	80	60
9/16 - 12	135	100	110	80	190	140	110	80
9/16 - 18	150	110	115	85	210	155	115	85
5/8 - 11	180	135	150	110	255	190	150	110
5/8 - 18	210	155	160	120	290	215	160	120
3/4 - 10	325	240	255	190	460	340	255	190
3/4 - 16	365	270	285	210	515	380	285	210
7/8 - 9	490	360	380	280	745	550	380	280
7/8 - 14	530	390	420	310	825	610	420	310
1 - 8	720	530	570	420	1100	820	570	420
1 - 14	800	590	650	480	1200	890	650	480

Downloaded from www.Manualslib.com manuals search engine

Notes

Downloaded from www.Manualslib.com manuals search engine

Section W - Warranty

Section Contents

Page
California Emission Control System Warranty, Off-Highway W-6
All Engines International Industrial (Off-Highway) W-4
All Engines United States And Canada Industrial (Off-Highway) W-1
CMD Quantum Commercial Marine Propulsion (QSB5.9/QSB6.7/QSC8.3/QSL9/QSM11/SDI/TDI) W-10

Downloaded from www.Manualslib.com manuals search engine

This Page Left Intentionally Blank

Downloaded from www.Manualslib.com manuals search engine

All Engines United States And Canada Industrial (Off-Highway) Coverage

Products Warranted

This Warranty applies to new Engines sold by Cummins and delivered to the first user on or after April 1, 1999, that are used in Industrial (Off-Highway) applications in the United States* and Canada, except for Engines used in marine, generator drive and certain defense applications, for which different Warranty Coverage is provided.

Base Engine Warranty

This Warranty covers any failures of the Engine, under normal use and service, which result from a defect in material or factory workmanship (Warrantable Failures).

Coverage begins with the sale of the Engine by Cummins. Coverage continues for two years or 2,000 hours of operation, whichever occurs first, from the date of delivery of the Engine to the first user, or from the date the unit is first leased, rented or loaned, or when the Engine has been operated for 50 hours, whichever occurs first. If the 2,000 hour limit is exceeded during the first year, Coverage continues until the end of the first year.

Engine aftertreatment components included in the Cummins Critical Parts List (CPL) and marked with a Cummins part number are covered under Base Engine Warranty.

Additional Coverage is outlined in the Emission Warranty section.

Extended Major Components Warranty

The Extended Major Components Warranty covers Warrantable Failures of the Engine cylinder block, camshaft, crankshaft and connecting rods (Covered Parts).

Bushing and bearing failures are not covered.

This Coverage begins with the expiration of the Base Engine Warranty and ends three years or 10,000 (3,000 hours for A Series Engines) hours of operation from the date of delivery of the Engine to the first user, or from the date the unit is first leased, rented or loaned, or from when the Engine has been operated for 50 hours, whichever occurs first.

Consumer Products

The Warranty on Consumer Products in the United States* is a LIMITED Warranty. **CUMMINS IS NOT RESPONSIBLE FOR INCIDENTAL OR CONSEQUENTIAL DAMAGES.** Any implied Warranties applicable to Consumer Products in the United States* terminate concurrently with the expiration of the express Warranties applicable to the product. In the United States*, some states do not allow the exclusion of incidental or consequential damages, or limitations on how long an implied Warranty lasts, so the limitations or exclusions herein may not apply to you.

These Warranties are made to all Owners in the chain of distribution and Coverage continues to all subsequent Owners until the end of the periods of Coverage.

Cummins Responsibilities

During The Base Engine Warranty

Cummins will pay for all parts and labor needed to repair the damage to the Engine resulting from a Warrantable Failure.

Cummins will pay for the lubricating oil, antifreeze, filter elements and other maintenance items that are not reusable due to the Warrantable Failure.

Cummins will pay reasonable costs for mechanics to travel to and from the equipment site, including meals, mileage and lodging, when the repair is performed at the site of the failure.

Cummins will pay reasonable labor costs for Engine removal and reinstallation when necessary to repair a Warrantable Failure.

During The Extended Major Components Warranty

Cummins will pay for the repair or, at its option, replacement of the defective Covered Part and any Covered Part damaged by a Warrantable Failure of the defective Covered Part.

Owner Responsibilities

During The Base Engine Warranty

Owner is responsible for the cost of lubricating oil, antifreeze, filter elements and other maintenance items provided during Warranty repairs unless such items are not reusable due to the Warrantable Failure.

During The Extended Major Components Warranty

Owner is responsible for the cost of all labor needed to repair the Engine, including the labor to remove and reinstall the Engine. When Cummins elects to repair a part instead of replacing it, Owner is not responsible for the labor needed to repair the part.

Owner is responsible for the cost of all parts required for the repair except for the defective Covered Part and any Covered Part damaged by a Warrantable Failure of the defective Covered Part.

Downloaded from www.Manualslib.com manuals search engine

Owner is responsible for the cost of lubricating oil, antifreeze, filter elements and other maintenance items replaced during repair of a Warrantable Failure.

During The Base Engine And Extended Major Components Warranties

Owner is responsible for the operation and maintenance of the Engine as specified in the applicable Cummins Operation and Maintenance Manual. Owner is also responsible for providing proof that all recommended maintenance has been performed.

Before the expiration of the applicable Warranty, Owner must notify a Cummins distributor, authorized dealer or other repair location approved by Cummins of any Warrantable Failure and make the Engine available for repair by such facility. Service locations are listed on the Cummins Worldwide Service Locator at cummins.com.

Owner is responsible for communication expenses, meals, lodging and similar costs incurred as a result of a Warrantable Failure.

Owner is responsible for non-Engine repairs, "downtime" expenses, cargo damage, fines, all applicable taxes, all business costs and other losses resulting from a Warrantable Failure.

Limitations

Engines with an emissions certification listed below must be operated using only diesel fuel having no more than the corresponding maximum sulfur content. Failure to use the specified fuel (see also Cummins Fuel Bulletin #3379001) can damage the Engine and aftertreatment system within a short period of time. This damage could cause the Engine to become inoperable and failures attributable to the use of incorrect fuels will be denied Warranty Coverage.

Maximum sulfur levels by emissions certification level as listed on the Engine's dataplate are:	
EPA 2007/2010/2013	max. 15 parts per million
EPA Tier 4 Interim / Final	max. 15 parts per million
EU Stage IIIB 2011	max. 15 parts per million
Euro 4/5	max. 50 parts per million
Euro 6	max. 10 parts per million

Cummins is not responsible for failures or damage resulting from what Cummins determines to be abuse or neglect, including, but not limited to: operation without adequate coolants or lubricants; overfueling; overspeeding; lack of maintenance of lubricating, cooling or intake systems; improper storage, starting, warm-up, run-in or shutdown practices; unauthorized modifications of the Engine. Cummins is also not responsible for failures caused by incorrect oil, fuel or diesel exhaust fluid or by water, dirt or other contaminants in the fuel, oil or diesel exhaust fluid.

For power units and fire pumps (package units), this Warranty applies to accessories, except for clutches and filters, supplied by Cummins which bear the name of another company.

For all other Industrial engines (except those previously mentioned), this Warranty does not apply to accessories which bear the name of another company. Such non-warranted accessories include, but are not limited to: alternators, starters, fans**, air conditioning compressors, clutches, filters, transmissions, torque converters, steering pumps, and non-Cummins fan drives, Engine compression brakes and air compressors.

Cummins Compusave units are covered by a separate Warranty.

Before a claim for excessive oil consumption will be considered, Owner must submit adequate documentation to show that consumption exceeds Cummins published standards.

Failures of belts and hoses supplied by Cummins are not covered beyond the first 500 hours or one year of operation, whichever occurs first.

Parts used to repair a Warrantable Failure may be new Cummins parts, Cummins approved rebuilt parts or repaired parts. Cummins is not responsible for failures resulting from the use of parts not approved by Cummins.

A new Cummins or Cummins approved rebuilt part used to repair a Warrantable Failure assumes the identity of the part it replaced and is entitled to the remaining Coverage hereunder.

For all A Series Applications, including Industrial, travel reimbursement for non-transportable equipment will be limited to 4.0 hours, $0.25/mile and 250 miles maximum. Any costs beyond this limit are the customer's responsibility.

CUMMINS DOES NOT COVER WEAR OR WEAROUT OF COVERED PARTS.

CUMMINS IS NOT RESPONSIBLE FOR INCIDENTAL OR CONSEQUENTIAL DAMAGES.

THESE WARRANTIES SET FORTH HEREIN ARE THE SOLE WARRANTIES MADE BY CUMMINS IN REGARD TO THESE ENGINES. CUMMINS MAKES NO OTHER WARRANTIES, EXPRESS OR IMPLIED, OR OF MERCHANTABILITY OR FITNESS FOR A PARTICULAR PURPOSE.

This Warranty gives you specific legal rights, and you may also have other rights which vary from state to state.

Downloaded from www.Manualslib.com manuals search engine

Emission Warranty

Products Warranted

This Emission Warranty applies to new Engines marketed by Cummins that are used in the United States* and Canada in vehicles designed for Industrial Off-Highway use. This Warranty applies to Engines delivered to the ultimate purchaser on or after April 1, 1999 for Engines up to 750 horsepower and on or after January 1, 2000 for Engines 751 horsepower and over.

Coverage

Cummins warrants to the ultimate purchaser and each subsequent purchaser that the Engine is designed, built and equipped so as to conform at the time of sale by Cummins with all U.S. Federal emission regulations applicable at the time of manufacture and that it is free from defects in workmanship or material which would cause it not to meet these regulations within the longer of the following periods: (A) ***Five years or 3,000 hours of operation for industrial applications, five years or 3,500 hours of operation for industrial spark-ignited Engines (GTA855, G855, G5.9C, G8.3-C, GTA8.9E, QSK19G) and five years or 2,500 hours of operation for industrial spark-ignited Engines (GKTA19-GC), whichever occurs first, as measured from the date of delivery of the Engine to the ultimate purchaser, or (B) The Base Engine Warranty.

If the vehicle in which the Engine is installed is registered in the state of California, a separate California Emission Warranty also applies.

Limitations

Engines with an emissions certification listed below must be operated using only diesel fuel having no more than the corresponding maximum sulfur content. Failure to use the specified fuel (see also Cummins Fuel Bulletin #3379001) can damage the Engine and aftertreatment system within a short period of time. This damage could cause the Engine to become inoperable and failures attributable to the use of incorrect fuels will be denied Warranty Coverage.

Maximum sulfur levels by emissions certification level as listed on the Engine's dataplate are:	
EPA 2007/2010/2013	max. 15 parts per million
EPA Tier 4 Interim / Final	max. 15 parts per million
EU Stage IIIB 2011	max. 15 parts per million
Euro 4/5	max. 50 parts per million
Euro 6	max. 10 parts per million

Failures, other than those resulting from defects in materials or workmanship, are not covered by this Warranty.

Cummins is not responsible for failures or damage resulting from what Cummins determines to be abuse or neglect, including, but not limited to: operation without adequate coolant or lubricants; overfueling; overspeeding; lack of maintenance of lubricating, cooling or intake systems; improper storage, starting, warm-up, run-in or shutdown practices; unauthorized modifications of the Engine. Cummins is also not responsible for failures caused by incorrect oil, fuel or diesel exhaust fluid or by water, dirt or other contaminants in the fuel, oil or diesel exhaust fluid.

Cummins is not responsible for non-Engine repairs, "downtime" expenses, cargo damage, fines, all business costs or other losses resulting from a Warrantable Failure.

CUMMINS IS NOT RESPONSIBLE FOR INCIDENTAL OR CONSEQUENTIAL DAMAGES.

* United States includes American Samoa, the Commonwealth of Northern Mariana Islands, Guam, Puerto Rico and the U.S. Virgin Islands.

** Alternators, starters, and fans ARE covered for the duration of the Base Engine Warranty on A Series and B3.3 Engines.

** Alternators and starters are covered for the duration of the Base Engine Warranty on QSK23 Engines.

*** Emissions Warranty for BLPG Industrial Off-Highway Engines is 5 years / 3,500 hours.

Downloaded from www.Manualslib.com manuals search engine

All Engines International Industrial (Off-Highway) Coverage

Products Warranted

This Warranty applies to new Engines sold by Cummins and delivered to the first user on or after April 1, 1999, that are used in Industrial (Off-Highway) applications anywhere in the world where Cummins approved service is available, except the United States and Canada. Different Warranty Coverage is provided for Engines used in marine, generator drive and certain defense applications.

Base Engine Warranty

This Warranty covers any failures of the Engine, under normal use and service, which result from a defect in material or factory workmanship (Warrantable Failure).

Coverage begins with the sale of the Engine by Cummins. Coverage continues for two years or 2,000 hours of operation, whichever occurs first, from the date of delivery of the Engine to the first user, or from the date the unit is first leased, rented or loaned, or when the Engine has been operated for 50 hours, whichever occurs first. If the 2,000 hour limit is exceeded during the first year, Coverage continues until the end of the first year.

Engine aftertreatment components included in the Cummins Critical Parts List (CPL) and marked with a Cummins part number are covered under Base Engine Warranty.

Extended Major Components Warranty

The Extended Major Components Warranty covers Warrantable Failures of the Engine cylinder block, camshaft, crankshaft and connecting rods (Covered Parts).

Bushing and bearing failures are not covered.

This Coverage begins with the expiration of the Base Engine Warranty and ends three years or 10,000 hours (3,000 hours for A Series Engines) of operation, from the date of delivery of the Engine to the first user, or from the date the unit is first leased, rented or loaned, or when the Engine has been operated for 50 hours, whichever occurs first.

These Warranties are made to all Owners in the chain of distribution, and Coverage continues to all subsequent Owners until the end of the periods of Coverage.

Cummins Responsibilities

During The Base Engine Warranty

Cummins will pay for all parts and labor needed to repair the damage to the Engine resulting from a Warrantable Failure.

Cummins will pay for the lubricating oil, antifreeze, filter elements and other maintenance items that are not reusable due to a Warrantable Failure.

Cummins will pay reasonable costs for mechanics to travel to and from the equipment site, including meals, mileage and lodging, when the repair is performed at the site of the failure.

Cummins will pay reasonable labor costs for Engine removal and reinstallation when necessary to repair a Warrantable Failure.

During The Extended Major Components Warranty

Cummins will pay for the repair or, at its option, replacement of the defective Covered Part and any Covered Part damaged by a Warrantable Failure of the defective Covered Part.

Owner Responsibilities

During The Base Engine Warranty

Owner is responsible for the cost of lubricating oil, antifreeze, filter elements and other maintenance items replaced during Warranty repairs unless such items are not reusable due to the Warrantable Failure.

During The Extended Major Components Warranty

Owner is responsible for the cost of all labor needed to repair the Engine, including the labor to remove and reinstall the Engine. When Cummins elects to repair a part instead of replacing it, Owner is not responsible for the labor needed to repair the part.

Owner is responsible for the cost of all parts required for the repair except for the defective Covered Part and any Covered Part damaged by a Warrantable Failure of the defective Covered Part.

Owner is responsible for the cost of lubricating oil, antifreeze, filter elements and other maintenance items replaced during repair of a Warrantable Failure.

During The Base Engine Warranty And Extended Major Components Warranties

Owner is responsible for the operation and maintenance of the Engine as specified in the applicable Cummins Operation and Maintenance Manual. Owner is also responsible for providing proof that all recommended maintenance has been performed.

Downloaded from www.Manualslib.com manuals search engine

Before the expiration of the applicable Warranty, Owner must notify a Cummins distributor, authorized dealer or other repair location approved by Cummins of any Warrantable Failure and make the product available for repair by such facility. Service locations are listed in the Cummins Worldwide Service Locator at cummins.com.

Owner is responsible for communication expenses, meals, lodging and similar costs incurred as a result of a Warrantable Failure.

Owner is responsible for non-Engine repairs, "downtime" expenses, cargo damage, fines, all applicable taxes, all business costs and other losses resulting from a Warrantable Failure.

Limitations

Engines with an emissions certification listed below must be operated using only diesel fuel having no more than the corresponding maximum sulfur content. Failure to use the specified fuel as listed in the Cummins Fuel Bulletin #3379001 Table 1 (Cummins Inc. Required Diesel Fuel Specifications) can damage the Engine and aftertreatment system within a short period of time. This damage could cause the Engine to become inoperable and failures attributable to the use of incorrect fuels will be denied Warranty Coverage. Fuel specifications also need to comply with local fuel regulations (EN590 for Europe and ASTM D975 for North America) for Warranty eligibility.

Maximum sulfur levels by emissions certification level as listed on the Engine's dataplate are:	
EPA 2007/2010/2013	max. 15 parts per million
EPA Tier 4 Interim / Final	max. 15 parts per million
EU Stage IIIB 2011	max. 15 parts per million
Euro 4/5	max. 50 parts per million
Euro 6	max. 10 parts per million

Cummins is not responsible for failures or damage resulting from what Cummins determines to be abuse or neglect, including, but not limited to: operation without adequate coolants or lubricants; overfueling; overspeeding; lack of maintenance of lubricating, cooling or intake systems; improper storage, starting, warm-up, run-in or shutdown practices; unauthorized modifications of the Engine. Cummins is also not responsible for failures caused by incorrect oil, fuel or diesel exhaust fluid or by water, dirt or other contaminants in the fuel, oil or diesel exhaust fluid.

For power units and fire pumps (package units) the Warranty applies to accessories, except for clutches and filters supplied by Cummins which bear the name of another company.

Except for the accessories noted previously, Cummins does not warrant accessories which bear the name of another company. Such non-warranted accessories include, but are not limited to: alternators, starters, fans*, air conditioning compressors, clutches, filters, transmissions, torque converters, steering pumps, non-Cummins fan drives and air cleaners.

Cummins Compusave units are covered by a separate Warranty.

Before a claim for excessive oil consumption will be considered, Owner must submit adequate documentation to show that consumption exceeds Cummins published standards.

Failures of belts and hoses supplied by Cummins are not covered beyond the first 500 hours or one year of operation, whichever occurs first.

Parts used to repair a Warrantable Failure may be new Cummins parts, Cummins approved rebuilt parts or repaired parts. Cummins is not responsible for failures resulting from the use of parts not approved by Cummins.

A new Cummins or Cummins approved rebuilt part used to repair a Warrantable Failure assumes the identity of the part it replaced and is entitled to the remaining Coverage hereunder.

For all A Series Applications, including Industrial, travel reimbursement for non-transportable equipment will be limited to 4.0 hours, $0.25/mile and 250 miles maximum. Any costs beyond this limit are the customer's responsibility.

CUMMINS DOES NOT COVER WEAR OR WEAROUT OF COVERED PARTS.

CUMMINS IS NOT RESPONSIBLE FOR INCIDENTAL OR CONSEQUENTIAL DAMAGES.

THESE WARRANTIES SET FORTH HEREIN ARE THE SOLE WARRANTIES MADE BY CUMMINS IN REGARD TO THESE ENGINES. CUMMINS MAKES NO OTHER WARRANTIES, EXPRESS OR IMPLIED, OR OF MERCHANTABILITY OR FITNESS FOR A PARTICULAR PURPOSE.

In the case of consumer sales, in some countries, the Owner has statutory rights which cannot be affected or limited by the terms of this Warranty.

Nothing in this Warranty excludes or restricts any contractual rights the Owner may have against third parties.

* Alternators, starters, and fans ARE covered for the duration of the Base Engine Warranty on A Series and B3.3 Engines.

* Alternators and starters are covered for the duration of the Base Engine Warranty on QSK23 Engines.

Downloaded from www.Manualslib.com manuals search engine

California Emission Control System Warranty, Off-Highway

Products Warranted

This Emission Control System Warranty applies to off-road diesel engines certified with the California Air Resources Board beginning with the year 1996 for engines up to 750 horsepower, beginning with the year 2000 for 751 horsepower and over, marketed by Cummins, and registered in California for use in industrial off-highway applications.

Your Warranty Rights and Obligations

The California Air Resources Board and Cummins Engine Company, Inc., are pleased to explain the emission control system warranty on your engine. In California, new off-road diesel engines must be designed, built and equipped to meet the State's stringent anti-smog standards. Cummins must warrant the emission control system on your engine for the periods of time listed below provided there has been no abuse, neglect or improper maintenance of your engine.

Your emission control system may include parts such as the fuel injection system and the air induction system. Also included may be hoses, belts, connectors and other emission-related assemblies.

Where a warrantable condition exists, Cummins will repair your off-road diesel engine at no cost to you including diagnosis, parts and labor.

Manufacturer's Warranty Coverage

This warranty coverage is provided for 5 years or 3,000 hours of engine operation, whichever first occurs from the date of delivery of the engine to the first user. If any emission-related part on your engine is defective, the part will be repaired or replaced by Cummins.

Downloaded from www.Manualslib.com manuals search engine

Coverage

This emission control system warranty applies only to the following A series, B3.3, B3.9, B4.5[s], B5.9, B6.7[s], QSB3.9-30, QSB4.5-30, QSB5.9-30, QSB5.9-44, C8.3, QSC8.3, and QSL9 emission control parts:

Fuel Pump	Intake Manifold
Static Timing	Charge Air Cooler
Delivery Valve	Aftercooler
Injection Control Valve Module	
	Exhaust Manifold
Injectors	
Calibration	Oxidation Catalyst
Needle	
Nozzle	Electronic Control System
Spring	Control Module
	Boost Pressure Sensor
Turbocharger	Coolant Temperature Sensor
Compressor Wheel	Fuel Pressure Sensor
Turbine Wheel	
Turbine Oil Seal	
Wastegate Valve	

Downloaded from www.Manualslib.com manuals search engine

Owner's Warranty Responsibilities

As the off-road diesel engine owner, you are responsible for the performance of the required maintenance listed in your Cummins Operation and Maintenance Manual. Cummins recommends that you retain all receipts covering maintenance on your off-road diesel engine, but Cummins cannot deny warranty solely for the lack of receipts or for your failure to ensure the performance of all scheduled maintenance.

You are responsible for presenting your off-road diesel engine to a Cummins dealer as soon as a problem exists. The warranty repairs should be completed in a reasonable amount of time, not to exceed 30 days.

As the off-road diesel engine owner, you should also be aware that Cummins may deny you warranty coverage if your off-road diesel engine or a part has failed due to abuse, neglect, improper maintenance or unapproved modifications.

Your engine is designed to operate on diesel fuel only. Use of any other fuel may result in your engine no longer operating in compliance with California's emissions requirements.

If you have any questions regarding your warranty rights and responsibilities, you should contact Cummins Customer Assistance Department at 1-800-343-7357 (1-800-DIESELS) or the California Air Resources Board at 9528 Telstar Avenue, El Monte, CA 91731.

Prior to the expiration of the applicable warranty, Owner must give notice of any warranted emission control failure to a Cummins distributor, authorized dealer or other repair location approved by Cummins and deliver the engine to such facility for repair. Repair locations are listed in Cummins United States and Canada Service Directory.

Owner is responsible for incidental costs such as: communication expenses, meals, lodging incurred by Owner or employees of Owner as a result of a warrantable failure.

Owner is responsible for business costs and losses, "downtime" expenses, and cargo damage resulting from a warrantable failure. CUMMINS IS NOT RESPONSIBLE FOR OTHER INCIDENTAL OR CONSEQUENTIAL DAMAGES, INCIDENTAL OR CONSEQUENTIAL DAMAGES INCLUDE BUT ARE NOT LIMITED TO FINES, THEFT, VANDALISM OR COLLISIONS.

Replacement Parts

Cummins recommends that any service parts used for maintenance, repair or replacement of emission control systems be new, genuine Cummins or Cummins approved rebuilt parts and assemblies, and that the engine be serviced by a Cummins distributor, authorized dealer or the repair location approved by Cummins. The owner may elect to have maintenance, replacement or repair of the emission control parts performed by a facility other than a Cummins distributor, an authorized dealer or a repair location approved by Cummins, and may elect to use parts other than new genuine Cummins or Cummins approved rebuilt parts and assemblies for such maintenance, replacement or repair; however, the cost of such service or parts will not be covered under this emission control system warranty.

Cummins Responsibilities

Repairs and service will be performed by any Cummins distributor, authorized dealer or other repair location approved by Cummins using new, genuine Cummins or Cummins approved rebuilt parts and assemblies. Cummins will repair any of the emission control parts found by Cummins to be defective without charge for parts or labor (including diagnosis which results in determination that there has been a failure of a warranted emission control part).

Emergency Repairs

In the case of an emergency where a Cummins distributor, authorized dealer, or other repair location approved by Cummins is not available, repairs may be performed by any available repair location using any replacement parts. Cummins will reimburse the Owner for expenses (including diagnosis), not to exceed the manufacturer's suggested retail price for all warranted parts replaced and labor charges based on the manufacturer's recommended time allowance for the warranty repair and the geographically appropriate hourly labor rate. A part not being available within 30 days or a repair not being complete within 30 days constitutes an emergency. Replaced parts and paid invoices must be presented at a Cummins authorized repair facility as a condition of reimbursement for emergency repairs not performed by a Cummins distributor, authorized dealer, or other repair location approved by Cummins.

Warranty Limitations

Cummins is not responsible for failures resulting from Owner or operator abuse or neglect, such as: operation without adequate coolant, fuel or lubricants; overfueling; overspeeding; lack of maintenance of lubricating, cooling or air intake systems; improper storage, starting, warm-up, run-in or shutdown practices.

The manufacturer warrants to the ultimate purchaser and each subsequent purchaser that the engine is designed, built, and equipped so as to conform with all applicable regulations adopted by the Air Resources Board, and that it is free from defects in materials and workmanship which cause the failure of a warranted part.

Any warranted part which is not scheduled for replacement as required maintenance, or which is scheduled only for regular inspection to the effect of "repair or replace as necessary" is warranted for the warranty period.

Any warranted part which is scheduled for replacement as required maintenance is warranted for the period of time prior to the first scheduled replacement point for that part.

Downloaded from www.Manualslib.com manuals search engine

The owner will not be charged for diagnostic labor which leads to the determination that a warranted part is defective, if the diagnostic work is performed at a warranty station.

The manufacturer is liable for damages to other engine components caused by the failure under warranty of any warranted part.

Cummins is not responsible for failures resulting from improper repair or the use of parts which are not genuine Cummins or Cummins approved parts.

These warranties, together with the express commercial warranties and emission warranty are the sole warranties of Cummins. There are no other warranties, express or implied, or of merchantability or fitness for a particular purpose.

Downloaded from www.Manualslib.com manuals search engine

CMD Quantum Commercial Marine Propulsion (QSB5.9/QSB6.7/QSC8.3/QSL9/QSM11/SDI/TDI)

Coverage

Engines Included in this Coverage

Marine Propulsion

QSB5.9/QSB6.7/QSC8.3/QSL9/QSM11/SDI/TDI

Products Warranted

This Warranty applies to new Product sold by Cummins MerCruiser Diesel, herein after “CMD”, that is branded as Cummins MerCruiser Diesel product and used in Commercial and Government Marine Propulsion applications anywhere in the world as permitted by US ITAR and Export Compliance regulations where CMD approved service is available* and delivered to the first user on or after May 1, 2011.

This Warranty covers any failures of the Product, under normal use and service, which results from a defect in CMD material or workmanship (Warrantable Failure). The (Product) includes the Engine, controls and other components other than pods or sterndrives as delivered from the CMD factory and accessories with a CMD part number that are added by a CMD approved distributor or OEM. Pods and sterndrives are covered under a separate CMD Warranty.

COMMERCIAL USE

Commercial use is defined as any work or employment related use of the product, or any use of the product which generates income, or any part of the warranty period, even if the product is only occasionally used for such purposes.

GOVERNMENT USE

Government use is defined as use by Federal, State, and Local agencies in non-revenue producing applications.

MARINE PROPULSION RATINGS

Government Service (GS) Rating

Intended for use in variable load applications where full power is limited to one hour out of every eight hours of operation.

Reduced power operation must be at or below cruise speed (rpm). Cruise speed (rpm) is dependent on the engine rated speed (rpm):

Rated Speed (rpm)	Cruise Speed (Reduction from rated speed, rpm)
2,000 to 2,800 rpm	200 rpm below rated
2,801 to 3,500 rpm	300 rpm below rated
3,501 to 4,500 rpm	400 rpm below rated

Government Service (GS)

The Government Service Rating applies to Government use in variable load applications where annual use is less than 500 hours and full power is one (1) out of every eight (8) hours of operation. Reduced power operation must be at or below cruise speed.

Light Commercial (LC)

The Light Commercial Rating applies to Commercial use in variable load applications where annual use is less than 500 hours and full power is one (1) out of every eight (8) hours of operation. Reduced power operation must be at or below cruise speed.

Intermittent Duty (ID)

This power rating is intended for intermittent use in variable load applications where full power is limited to two hours out of every eight hours of operation. Also, reduced power operations must be at or below 200 rpm of the maximum rated rpm. This rating is an ISO3046 Fuel Stop Power Rating and is for applications that operate less than 1,500 hours per year.

Medium Duty (MD)

This power rating is intended for continuous use in variable load applications where full power is limited to six hours out of every twelve hours of operation. Also, reduced power operations must be at or below 200 rpm of the maximum rated rpm. This rating is an ISO3046 Fuel Stop Power Rating and is for applications that operate less than 3,000 hours per year.

Heavy Duty (HD)

This power rating is intended for continuous use in variable load applications where full power is limited to eight hours out of every ten hours of operation. Also, reduced power must be at least 200 rpm below the maximum rated rpm. This rating is an ISO3046 Fuel Stop Power Rating and is for applications that operate less than 5,000 hours per year.

Continuous Duty (CD)

This power rating is intended for continuous use in applications requiring uninterrupted service at full power. This rating is an ISO3046 Standard Power Rating.

Downloaded from www.Manualslib.com manuals search engine

Base Engine Warranty

This warranty covers any failures of the Product, under normal use and service, which result from a defect in CMD material or factory workmanship (Warrantable Failure). Coverage begins with the sale of the Engine by CMD and continues for the Duration stated in the following table. The Duration commences on either the date of delivery of the Product to the first end-user, or the date the unit is first leased, rented or loaned, or when the Product has been operated for 50 hours, whichever occurs first. The Base Coverage duration ends two (2) years after the in-service date or allowed hours of total operation, whichever occurs first.

Warranty Coverage Periods				
Rating	**QSB, QSC, QSL, SDI, TDI**		**QSM11**	
	Coverage ends at whichever occurs first, months or hours of usage.		Coverage ends at whichever occurs first, months or hours of usage.	
	Months	Hours	Months	Hours
Government Service (GS)	24	1,000	24	1,000
Light Commercial (LC)	24	1,000	NA	NA
Intermittent Duty (ID)	24	3,000	24	3,000
Medium Duty (MD)	24	5,000	24	6,000
Heavy Duty (HD)	24	5,500	24	8,000
Continuous Duty (CD)	24	6,500	24	9,000

Cummins MerCruiser Diesel Responsibilities

During Engine Warranty

CMD will pay for all parts and labor needed to repair the damage to the Product resulting from a Warrantable Failure when performed during normal business hours. All labor costs will be paid in accordance with Cummins published Standard Repair Time guidelines.

When it is necessary for mechanics to make on-site warranty repairs CMD will pay reasonable travel expenses, including meals, mileage and lodging, for mechanics to travel to and from the repair dock. Labor must be performed by an authorized CMD Repair Facility.

CMD will pay for the lubricating oil, antifreeze, filter elements, and other maintenance items that are not reusable due to the Warrantable Failure.

CMD will pay for reasonable labor costs for Engine removal and reinstallation when necessary to repair a Warrantable Failure.

Owner Responsibilities

During the Engine Warranty

Owner is responsible for the operation and maintenance of the Product as specified in the applicable CMD Operation and Maintenance Manual. Owner is also responsible for providing proof that all recommended maintenance has been performed. This warranty does not cover normal wear and tear of covered parts. Exceeding the operational parameters of the rating will void this Warranty. The Owner of the boat is ultimately responsible for ensuring the Engine is properly operated and maintained. The Warranty will be void on any Engines that are misapplied, not maintained properly or misused.

Before the expiration of the applicable warranty, Owner must notify a CMD service provider, distributor, authorized dealer, or other repair location approved by CMD of any Warrantable Failure and make the Engine available for repair by such facility. Locations in the United States and Canada are listed in the Cummins U.S. and Canada Sales and Service Directory; other locations are listed in the CMD International Sales and Service Directory.

Owner is responsible for the cost of lubricating oil, antifreeze, filter elements, and other maintenance items replaced during warranty repairs unless such items are not reusable due to the Warrantable Failure.

Owner is responsible for communication expenses, meals, lodging, and similar costs incurred as a result of a Warrantable Failure.

Downloaded from www.Manualslib.com manuals search engine

Owner is responsible for non-Engine repairs, “downtime” expenses, cargo damage, fines, all applicable taxes, all business costs, and other losses resulting from a Warrantable Failure.

In the event of any Product failure, Owner is responsible for the cost of towing the boat to the repair dock and for all associated docking and harbor charges.

Owner is responsible for maintaining the Engine hourmeter in good working order at all times and to ensure that the hourmeter accurately reflects the total hours of operation of the Product.

Owner is responsible for the costs to investigate complaints, unless the problem is caused by a defect in CMD material or factory workmanship.

Limitations

1. Maintenance Component Limitations

CMD will replace certain maintenance components if they fail within 90 days or less after the base coverage starts. Maintenance components include but are not limited to: sea water pump impellers, zinc plugs, oil filters, fuel filters, air filters, water filters, fuel/water separator filters, expansion tank pressure caps, belts, hoses.

2. Other Component Limitations

CMD does not warrant components that are not supplied by CMD factory.

3. CMD supplied alternators and starters limitation

Warranty coverage is limited to 2 years or 2,000 hours, whichever expires first for rating other than Government Service.

Warranty coverage is limited to 2 years or 1,000 hours, whichever expires first for the Government Service rating.

Consumer Products

The warranty on Consumer Products in the United States is a limited warranty. **CMD IS NOT RESPONSIBLE FOR INCIDENTAL OR CONSEQUENTIAL DAMAGES.** Any implied warranties applicable to Consumer Products terminate concurrently with the expiration of the express warranties applicable to the Product. In the United States, some states do not allow the exclusion of incidental or consequential damages, or limitations on how long an implied warranty lasts, so the above limitations or exclusions may not apply to you.

CMD is not responsible for failures or damage resulting from what CMD determines to be abuse or neglect, including, but not limited to: operation without adequate coolants or lubricants; overfueling; overspeeding; lack of maintenance of cooling, lubricating or intake systems; improper storage, starting, warm-up, run-in or shutdown practices; unauthorized modifications to the engine; improper propping that does not allow the engine to run at its maximum rated speed; submersion, freezing temperatures, improper service, removal of parts, or running the engine out of water; water ingestion, unless caused by a Warrantable failure. CMD is also not responsible for failures caused by incorrect oil or fuel or by water, dirt or other contaminants in the fuel or oil.

Before a claim for excessive oil consumption will be considered, Owner must submit adequate documentation to show that oil consumption exceeds CMD published standards.

CMD is not responsible for failures of maintenance components supplied by CMD beyond 90 days after the coverage duration start date. Maintenance components include, but are not limited to: sea water pump impellers; zinc plugs; oil filters; fuel filters; air filters; water filters; fuel/water separator filters.

Parts used in warranty repairs may be new CMD parts, CMD approved rebuilt parts, or repaired parts. CMD is not responsible for failures resulting from the use of parts not supplied by CMD.

A new CMD or CMD approved rebuilt part used to replace a Warranted Part assumes the identity of the Warranted Part it replaced and is entitled to the remaining coverage hereunder.

CMD DOES NOT COVER WEAR OR WEAROUT OF COVERED PARTS.

CMD IS NOT RESPONSIBLE FOR INCIDENTAL OR CONSEQUENTIAL DAMAGES.

THESE WARRANTIES SET FORTH HEREIN ARE THE SOLE WARRANTIES MADE BY CMD IN REGARD TO THESE ENGINES. CMD MAKES NO OTHER WARRANTIES, EXPRESS OR IMPLIED, OR OF MERCHANTABILITY OR FITNESS FOR A PARTICULAR PURPOSE.

Emission Warranty

Products Warranted

This Emission Warranty applies to new Engines certified to United States EPA 40 CFR 94 sold by CMD that are installed in vessels flagged or registered in the United States**.

Coverage

CMD warrants to the first user and each subsequent purchaser that the Engine is designed, built, and equipped so as to conform at the time of sale by CMD with all U.S. Federal emission regulations applicable at the time of manufacture and that it is free from defects in workmanship or material which would cause it not to meet these regulations within the longer of the following periods: (A) Five years or 5,000 hours of operation, whichever occurs first. The Emissions

Downloaded from www.Manualslib.com manuals search engine

Warranty starts from the date of delivery of the Engine to the first user, or the date the unit is first leased, rented, or loaned, or when the Engine has been operated for 50 hours, whichever occurs first, or (B) The Base Engine Warranty.

Limitations

The owner may elect to have maintenance, replacement, or repair of the emission control parts performed by a facility other than a CMD distributor, an authorized dealer or a repair location approved by CMD, and may elect to use parts other than new genuine CMD or CMD approved rebuilt parts and assemblies for such maintenance, replacement or repair; however, the cost of such service or parts and subsequent failures resulting from such service or parts will not be covered under this emission control system warranty.

Failures, except those resulting from a defect in materials, or factory workmanship, are not covered by this WARRANTY.

CMD IS NOT RESPONSIBLE FOR INCIDENTAL OR CONSEQUENTIAL DAMAGES.

In the United States** and Canada, this warranty gives you specific legal rights, and you may also have other rights which vary from state to state.

Outside the United States** and Canada, in case of consumer sales, in some countries the Owner has statutory rights which cannot be affected or limited by the terms of this warranty.

Nothing in this warranty excludes or restricts any contractual rights the Owner may have against third parties.

* Locations in the United States and Canada are listed in the Cummins United States and Canada Sales and Service Directory; other locations are listed in the Cummins International Sales and Service Directory.

** United States includes American Samoa, the Commonwealth of Northern Mariana Islands, Guam, Puerto Rico, and the U.S. Virgin Islands.

Downloaded from www.Manualslib.com manuals search engine

Notes

Downloaded from www.Manualslib.com manuals search engine

About the Manual i-2
General Information i-2
Acronyms and Abbreviations i-15
General Information i-15
Additional Service Literature L-1
General Information L-1
Air Cleaner Restriction 4-1
Maintenance Check 4-1
Air Compressor 4-3
Maintenance Check 4-3
Air Compressor Air Pressure Rises Slowly TS-3
Air Compressor Cycles Frequently TS-4
Air Compressor Discharge Lines 7-9
General Information 7-9
Maintenance Check 7-9
Air Compressor Noise is Excessive TS-5
Air Compressor Pumping Excess Lubricating Oil into the Air System TS-6
Air Compressor Will Not Maintain Adequate Air Pressure (Not Pumping Continuously) TS-8
Air Compressor Will Not Stop Pumping TS-9
Air Intake Piping 3-2
Maintenance Check 3-2
Air Intake System V-5
Specifications V-5
Air Tanks and Reservoirs 3-4
Drain 3-4
Alternator A-4
Preparatory Steps A-4
Alternator Not Charging or Insufficient Charging TS-10
Alternator Overcharging TS-11
Batteries 5-11
Inspect 5-11
Battery Cables and Connections 5-12
Initial Check 5-12
Belt Tensioner, Automatic (Water Pump) A-2
Initial Check A-2
California Emission Control System Warranty, Off-Highway W-6
Capscrew Markings and Torque Values V-20
Capscrew Markings and Torque Values - Metric V-20
Capscrew Markings and Torque Values - U.S. Customary V-21
General Information V-20
Charge-Air Cooler 4-2
Maintenance Check 4-2
Charge-Air Cooler A-4
Leak Test A-6
Pressure Test A-4
Temperature Differential Test A-7
Charge-Air Piping 4-2
Maintenance Check 4-2
Cold Weather Starting 1-3
General Information 1-3
Using Starting Aids 1-3
Coolant Filter 5-8
Install 5-9
All Applications Except Marine 5-9
Marine Applications 5-10
Remove 5-8
All Applications Except Marine 5-8
Marine Applications 5-8
Coolant Level 3-4
Maintenance Check 3-4
Coolant Loss - External TS-12
Coolant Recommendations and Specifications V-13
Cooling System Sealing Additives V-15
Cooling System Soluble Oils V-16
Fully Formulated Coolant/Antifreeze V-13
Coolant Temperature Above Normal - Gradual Overheat TS-13
Coolant Temperature Above Normal - Sudden Overheat TS-16
Coolant Temperature Below Normal TS-18
Cooling System 7-1
Drain 7-1
Fill 7-2
Flush 7-4
Cooling System V-4
Specifications V-4
Crankcase Breather Tube 3-3
Maintenance Check 3-3
Cranking Fuel Pressure is Low TS-19
Cummins Customized Parts Catalog L-3
General Information L-3
Ordering the Customized Parts Catalog L-3
Ordering by Telephone L-3
Ordering On-Line L-3
Cummins® Service Engine Model Product Identification E-10
General Information E-10
Cummins®/Fleetguard® Filter Specifications V-8
General Information V-8
Daily Maintenance Procedures - Overview 3-1
General Information 3-1
System Operation Report 3-1
Unusual System Noise 3-1
Distributors - International S-33
Locations S-33
Distributors and Branches S-4
Australia S-24
Canada S-19
China, People's Republic S-22
New Zealand S-28
United States S-4
Division and Regional Offices S-3
Locations S-3
Drive Belt Tension V-17
Tension Chart V-17
Drive Belt, Alternator A-4
Install A-4
Remove A-4
Drive Belt, Cooling Fan 6-3
Install 6-3
Remove 6-3
Drive Belt, Cooling Fan A-2
Install A-2
Remove A-2
Drive Belts 6-1
Maintenance Check 6-1
Electrical System V-7
Batteries (Specific Gravity) V-7
Electromagnetic Interference (EMI) 1-53
General Information 1-53
System EMI Radiation Levels 1-53
System EMI Susceptibility 1-53
Electronic Controlled Fuel System 1-7
Diagnostic Fault Codes 1-50
Engine Protection System 1-9
General Information 1-7
Programmable Features 1-10
Emergency and Technical Service S-1
General Information S-1
Engine Acceleration or Response Poor TS-20
Engine Brake 8-4
Adjust 8-4
Finishing Steps 8-8
Preparatory Steps 8-4
Engine Component Torque Values V-18
Torque Table V-18
Engine Diagrams E-4
Engine Views E-4
Engine Difficult to Start or Will Not Start (Exhaust Smoke) TS-22
Engine Difficult to Start or Will Not Start (No Exhaust Smoke) TS-24
Engine Identification E-1
Cummins® Engine Nomenclature E-2
ECM Dataplate E-3
Engine Dataplate E-1
Fuel Injection Pump Dataplate E-2
Engine Mounting Bolts 7-10
Maintenance Check 7-10
Engine Noise Excessive TS-25
Engine Noise Excessive — Combustion Knocks TS-27
Engine Operating Range 1-6
General Information 1-6
Engine Power Output Low TS-28
Engine Runs Rough at Idle TS-30
Engine Runs Rough or Misfires TS-31
Engine Shutdown 1-7
General Information 1-7
Engine Shuts Off Unexpectedly or Dies During Deceleration TS-32
Engine Speed Surges at Low or High Idle TS-33
Engine Speed Surges in PTO or Cruise Control TS-35
Engine Speed Surges Under Load or in Operating Range TS-34
Engine Starts But Will Not Keep Running TS-36
Engine Steam Cleaning 7-8
Clean 7-8
Engine Storage - Long Term ES-1
General Information ES-1
Engine Vibration Excessive TS-37
Engine Will Not Crank or Cranks Slowly (Air Starter) TS-38
Engine Will Not Crank or Cranks Slowly (Electric Starter) TS-39
Engine Will Not Reach Rated Speed (RPM) TS-40
Exhaust System V-6
Specifications V-6
Fan Hub, Belt Driven 6-3
Maintenance Check 6-3
Fan, Cooling 3-2
Inspect for Reuse 3-2
Fault Code Warning Lamps Do Not Illuminate TS-42

Downloaded from www.Manualslib.com manuals search engine

Fault Code Warning Lamps Stay On (No Apparent Reason)....TS-41
Flow Diagram, Air Intake System D-12
General Information....D-12
Flow Diagram, Compressed Air System D-15
General Information....D-15
Flow Diagram, Cooling System D-10
General Information....D-10
Flow Diagram, Exhaust System D-13
General Information....D-13
Flow Diagram, Fuel System D-2
General Information....D-2
Flow Diagram, Lubricating Oil System D-4
General Information....D-4
Fuel Consumption Excessive....TS-43
Fuel Filter (Spin-On Type) 5-1
Finishing Steps....5-4
General Information....5-1
CAPS Fuel System....5-1
Cummins Common Rail Fuel System....5-1
Install....5-2
CAPS Fuel System....5-2
Cummins Common Rail Fuel System....5-3
Prime....5-3
Remove....5-2
Fuel in Coolant....TS-44
Fuel in the Lubricating Oil....TS-45
Fuel Pump 4-2
General Information....4-2
Maintenance Check....4-3
Fuel Recommendations and Specifications V-9
Fuel Recommendations....V-9
Fuel System V-2
Specifications....V-2
Cummins Common Rail Fuel System....V-2
CAPS Fuel System....V-2
Fuel-Water Separator 3-5
Drain....3-5
Canister Type....3-5
Spin-on Type....3-5
General Cleaning Instructions i-10
Abrasive Pads and Abrasive Paper....i-10
Definition of Clean....i-10
Fuel System....i-13
Gasket Surfaces....i-11
Plastic Bead Cleaning....i-12
Solvent and Acid Cleaning....i-11
Steam Cleaning....i-12
General Engine V-1
Specifications....V-1
General Repair Instructions i-8
General Information....i-8
Welding on a Vehicle with an Electronic Controlled Fuel System....i-9
General Safety Instructions i-6
Important Safety Notice....i-6
How to Use the Manual i-3
General Information....i-3
Illustrations i-5
General Information....i-5
Intake Manifold Air Temperature Above Specification....TS-46
Intake Manifold Pressure (Boost) is Below Normal....TS-48
Lubricating Oil and Filters 5-4
Drain....5-4
Fill....5-6
Install....5-5
Remove....5-5
Lubricating Oil Consumption Excessive....TS-49
Lubricating Oil Contaminated....TS-50
Lubricating Oil Dipstick A-1
Calibrate....A-1
Lubricating Oil Level 3-6
Maintenance Check....3-6
Lubricating Oil Pressure High....TS-51
Lubricating Oil Pressure Low....TS-52
Lubricating Oil Recommendations and Specifications V-10
AfterMarket Oil Additive Usage....V-12
General Information....V-10
New Engine Break-in Oils....V-12
Lubricating Oil Sludge in the Crankcase Excessive....TS-54
Lubricating Oil System V-3
Specifications....V-3
Maintenance Guidelines - Overview 2-1
General Information....2-1
Maintenance Procedures - Overview 4-1
General Information....4-1
Maintenance Procedures - Overview 5-1
General Information....5-1
Maintenance Procedures - Overview 6-1
General Information....6-1
Maintenance Procedures - Overview 7-1
General Information....7-1
Maintenance Procedures - Overview 8-1
General Information....8-1
Maintenance Record Form 2-5
Maintenance Data....2-5
Maintenance Schedule 2-3
General Information....2-3
Oil Drain Intervals....2-4
Normal Starting Procedure 1-2
General Information....1-2
All Engines International Industrial (Off-Highway) W-4
All Engines United States And Canada Industrial (Off-Highway) W-1
Operating Instructions - Overview 1-1
General Information....1-1
Operating the Engine 1-4
Cold Weather....1-5
Normal....1-4
Winterfronts and Shutters....1-5
Overhead Set 8-1
Adjust....8-1
Finishing Steps....8-3
Preparatory Steps....8-1
Problem Solving S-1
General Information....S-1
CMD Quantum Commercial Marine Propulsion (QSB5.9/QSB6.7/QSC8.3/ QSL9/QSM11/SDI/TDI) W-10
Radiator Hoses 7-8
Maintenance Check....7-8
Radiator Pressure Cap 5-13
General Information....5-13
Inspect for Reuse....5-14
Regional Offices - International S-29
Locations....S-29
Routine Service and Parts S-1
General Information....S-1
Sealants V-19
General Information....V-19
Service Literature Ordering Location L-2
Contact Information....L-2
Smoke, Black — Excessive....TS-55
Smoke, White — Excessive....TS-56
Starting Motor A-8
Clean and Inspect for Reuse....A-10
Finishing Steps....A-11
Cummins Branded Starters....A-11
Non-Cummins Branded Starters....A-12
Install....A-11
Measure....A-11
Preparatory Steps....A-9
Remove....A-10
Rotation Check....A-8
Starting Procedure After Extended Shutdown or Oil Change 1-4
General Information....1-4
Supplemental Coolant Additive (SCA) and Antifreeze Concentration 5-7
Maintenance Check....5-7
Symbols i-4
General Information....i-4
System Diagrams - Overview D-1
General Information....D-1
To the Owner and Operator i-1
General Information....i-1
Tool Requirements 2-2
General Information....2-2
Troubleshooting Procedures and Techniques TS-1
General Information....TS-1
Troubleshooting Symptoms Charts TS-2
General Information....TS-2
Turbocharger 6-4
Inspect for Reuse....6-4
Turbocharger Leaks Engine Oil or Fuel....TS-57
Vibration Damper, Rubber 7-7
Inspect for Reuse....7-7
Vibration Damper, Viscous 7-8
Inspect....7-8

Downloaded from www.Manualslib.com manuals search engine

NOTES

Downloaded from www.Manualslib.com manuals search engine

Downloaded from www.Manualslib.com manuals search engine

NOTES

Downloaded from www.Manualslib.com manuals search engine

Downloaded from www.Manualslib.com manuals search engine

CALIFORNIA
Proposition 65 Warning

Diesel engine exhaust and some of its constituents are known to the State of California to cause cancer, birth defects, and other reproductive harm.

Downloaded from www.Manualslib.com manuals search engine

Cummins Inc.
Box 3005
Columbus, Indiana, U.S.A., 47202

Registered Office
Cummins Ltd.
49 - 51 Gresham Road,
Staines,
Middlesex TW18 2BD,
England
Registration 573951 England

Copyright© 2013
Cummins Inc.

Cummins Customer Assistance Center
1-800-DIESELS™ (1-800-343-7357)
APPLICABLE ONLY IN U.S.A. AND CANADA

Bulletin 4021518
Printed in U.S.A. 09-APRIL-2013

Downloaded from www.Manualslib.com manuals search engine